ORDER NO. BSD0109M022
D01

Service Manual

Panasonic
Professional/Industrial Video

VHS

Video Cassette Recorder

AG-2570P

Z-MECHANISM

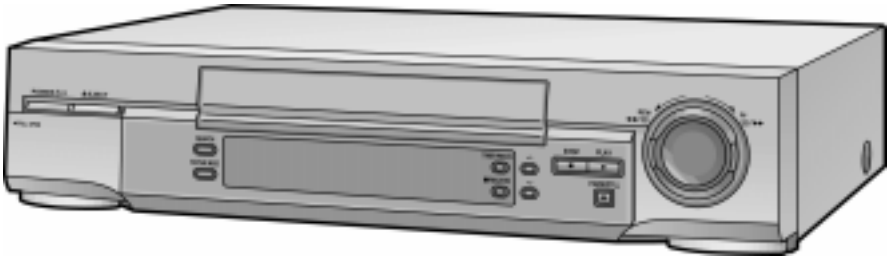

Adjustment procedures, Disassembly Procedures and Assembly Procedures for Mechanism Chassis are separate volume from this service manual. (refer to the appendix in this CD-ROM.)
Please refer to the service manual for Z-Mechanism Chassis. (Order No. VSD9706M201, VRD9802005C2)

Panasonic

© 2001 Matsushita Electric Industrial Co., Ltd. All rights reserved.
Unauthorized copying and distribution is a violation of law.

⚠ WARNING

This service information is designed for experienced repair technicians only and is not designed for use by the general public. It does not contain warnings or cautions to advise non-technical individuals of potential dangers in attempting to service a product. Products powered by electricity should be serviced or repaired only by experienced professional technicians. Any attempt to service or repair the product or products dealt with in this service information by anyone else could result in serious injury or death.

Specifications

AG-2570P

Power Source:	120 V AC 50/60Hz
Power Consumption:	24W
Video Recording System:	2 rotary heads, helical scanning system
Video Heads:	4 heads
Audio Heads:	2 heads
Tape Speed:	SP; 33.3 mm/s EP; 11.1 mm/s
Tape Format:	VHS tape
Record/Playback Time:	SP; 210 min with NV-T210 EP; 630 min with NV-T210
FF/REW Time:	Approx. 60 s with NV-T120
VIDEO	
Television System:	EIA; Standard (525 lines, 60 fields), NTSC color signal
Modulation System:	Luminance; FM azimuth recording Color signal; converted subcarrier phase shift recording
Input Level:	VIDEO IN (PHONO); 1.0 Vp-p, 75 ohm
Output Level:	VIDEO OUT (PHONO); 1.0 Vp-p, 75 ohm RF modulated; VHF channel US3 or 4, 75 ohm, terminated
AUDIO	
Input Level:	AUDIO IN (PHONO); −10 dBV, 47 kohm
Output Level:	AUDIO OUT (PHONO); −8 dBV, 1 kohm
Audio Track:	1 track (normal) 2 tracks (Hi-Fi)
Video Horizontal Resolution:	Color; more than 200 lines
Signal-to-Noise Ratio:	Video; more than 40 dB/SP
Dynamic Range:	Audio; more than 60 dB (Hi-Fi)
Audio Frequency Response:	20 Hz–20 kHz (Hi-Fi)
Operating Temperature:	5°C–40°C (41°F–104°F)
Operating Humidity:	35%–80%
Weight:	3.3 kg (7.26 lbs.)
Dimensions:	430 (W)×87 (H)×289 (D) mm [16 15/16" (W)×3 7/16" (H)×11 7/16" (D)]

Weight and dimensions shown are approximate.
Specifications are subject to change without notice.

CONTENTS

	Page
SAFETY PRECAUTIONS	3
1 GENERAL DESCRIPTIONS	5
1.1. SERVICE CAUTION-1	5
1.2. HOW TO REPLACE THE LITHIUM BATTERY	7
1.3. SERVICE CAUTION-2	8
1.4. SELF-TEST & SERVICE INFORMATION DISPLAY	10
2 ADJUSTMENT PROCEDURES	11
2.1. DISASSEMBLY METHOD	11
2.2. MECHANICAL ADJUSTMENT PROCEDURES	13
2.3. ELECTRICAL ADJUSTMENT PROCEDURES	14
3 ABBREVIATIONS	15
4 INPUT/OUTPUT CHART	19
4.1. INPUT/OUTPUT CHART FOR IC6001	19
5 BLOCK DIAGRAMS	
SYSTEM CONTROL & SERVO / TIMER SECTION BLOCK DIAGRAM	BLK-1
VIDEO SECTION BLOCK DIAGRAM	BLK-2
AUDIO SECTION BLOCK DIAGRAM	BLK-3
6 SCHEMATIC DIAGRAMS	
POWER SCTION	SCB001
SYSCON & SERVO / TIMER SECTION	SCM002
VIDEO SECTION	SCM004
AUDIO SECTION	SCM006
JOG SHUTTLE	SCM007
FRONT JACK	SCM008
7 CIRCUIT BOARD ASSEMBLIES	
MAIN P.C.BOARD (VEP06E21E)	CBA-1
JOG SHUTTLE P.C.BOARD (VEP06E11A)	CBA-2
FRONT P.C.BOARD (VEP04770A)	CBA-2
8 EXPLODED VIEWS & REPLACEMENT PARTS LIST	PRT-1
SERVICING FIXTURES & TOOLS	PRT-1
CHASSIS PARTS LIST	PRT-2
CASING PARTS SECTION	PRT-4
PACKING PARTS SECTION	PRT-6
9 ELECTRICAL REPLACEMENT PARTS LIST	PRT-8

SAFETY PRECAUTIONS

GENERAL GUIDELINES

1. When servicing, observe the original lead dress. If a short circuit is found, replace all parts which have been over-heated or damaged by the short circuit.
2. After servicing, see to it that all the protective devices such as insulation barriers, insulation papers shields are properly installed.
3. After servicing, make the following leakage current checks to prevent the customer from being exposed to shock hazards.

LEAKAGE CURRENT COLD CHECK

1. Unplug the AC cord and connect a jumper between the two prongs on the plug.
2. Measure the resistance value, with an ohm meter, between the jumpered AC plug and each exposed metallic cabinet part on the equipment such as screwheads, connectors, control shafts, etc. The resistance value must be more than 5MΩ.

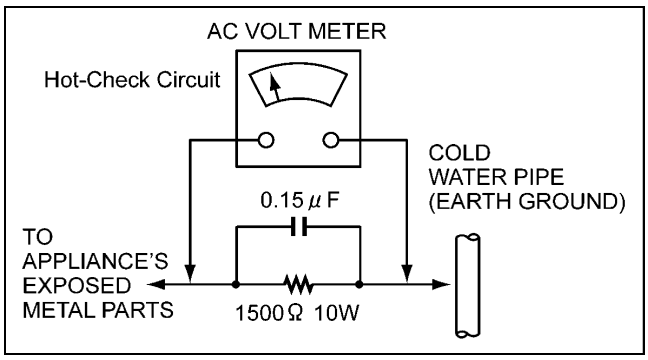

Figure1

LEAKAGE CURRENT HOT CHECK (See Figure 1)

1. Plug the AC cord directly into the AC outlet.
   Do not use an isolation transformer for this check.
2. Connect a 1.5KΩ, 10W resistor, in parallel with a 0.15μ F capacitor, between each exposed metallic part on the set an a good earth ground such as a water pipe, as shown in Figure1.
3. Use an AC voltmeter, with 1000 ohms/volt or more sensitivity, to measure the potential across the resistor.
4. Check each exposed metallic part, and measure the voltage at each point.
5. Reverse the AC plug in the AC outlet repeat each of the above measurements.
6. The potential at any point should not exceed 0.15 volts RMS. A leakage current tester (Simpson Model 229 equivalent) may be used to make the hot checks, leakage current must not exceed 0.1 milliamp. In case a measurement is outside of the limits specified, there is a possibility of a shock hazard, and the equipment should be repaired and rechecked before it is returned to the customer.

ELECTROSTATICALLY SENSITIVE (ES) DEVICES

Some semiconductor (solid state) devices can be damaged easily by static electricity. Such components commonly are called Electrostatically sensitive (ED) Devices. Examples of typical ES devices are integrated circuits and some field-effect transistors and semiconductor "chip" components. The following techniques should be used to help reduce the incidence of component damage caused by static electricity.

1. Immediately before handling any semiconductor component or semiconductor-equipped assembly, drain off any electrostatic charge on your body by touching a known earth ground.
   Alternatively, obtain and wear a commercially available discharging wrist trap device, which should be removed for potential shock reasons prior to applying power to the unit under test.
2. After removing an electrical assembly equipped with ES devices, place the assembly on a conductive surface such as alminum foil, to prevent electrostatic charge buildup or exposure of the assembly.
3. Use only a grounded tip soldering iron to solder or unsolder ES devices.
4. Use only an anti-static solder removal device classified as "anti-static" can generate electrical charges sufficient to damage ES devices.
5. Do not use freon-propelled chemicals. These can generate electrical charges sufficient to damage ES devices.
6. Do not remove a replacement ES device from its protective package until immediately before you are ready to install it.
   (most replacement ES devices are package with leads electrically shorted together by conductive foam, alminum foil or comparable conductive material).
7. Immediately before removing the protective material from the leads of a replacement ES device, touch the protective material to the chassis or circuit assembly into which the device will be installed.
   CAUTION : Be sure no power is applied to the chassis or circuit, and observe all other safety precautions.
8. Minimize bodily motions when handling unpackaged replacement ES devices. (Otherwise hamless motion such as the brushing together of your clothes fabric or the lifting of your foot from a carpeted floor can generate static electricity sufficient to damage an ES device).

X-RADIATION

WARNING

1. The potential source of X-radiation in EVF sets is the High Voltage section and the picture tube.
2. When using a picture tube test jig for service, ensure that jig is capable of handling 10kV without causing X-Radiation.

Note : It is important to use an accurate periodically calibrated high voltage meter.

3. Measure the High Voltage. The meter (electric type) reading should indicate 2.5kV,±0.15kV. If the meter indication is out of tolerance, immediate service and correction is required to prevent the possibility of premature component failure. To prevent an X-Radiation possibility, it is essential to use the specified picture tube.

Memo

1 GENERAL DESCRIPTIONS

1.1. SERVICE CAUTION-1

When the Microprocessor IC6001 and/or Back-up battery B6001 are replaced, read following procedure carefully and proceed it.

[REASONS]

There is a RAM in the IC6001, which is backing up:

1. Programme Navigation Data
2. TV Tuning Data
3. PG Shifter Adjustment Data
4. Option Setting Data

When IC6001 and/or B6001 are replaced, all above listed data become not available.

These data is backing up by using the power source of:

*AC Connected : AC Power source
*AC Disconnected : Back-up Battery (B6001)

1.1.1. REPLACING PROCEDURE [IC6001/B6001]

[1. PREPARATION]

Before replacing IC6001 and/or B6001:

- Take a note that store TV broadcast channels.
  (Because, its user may store TV broadcasts by manually other than "Auto Tuning" operation and it is also erased.)
- Back-up the Programme Navigation data.
  (The Programme Navigation data is transferable by using "Programme Navigation Data Back-up Tool (VFK1493P)" (You may take make it by referring following schematic diagram.)

-NECESSARY STATUS OF THE VCR UNIT-

1. The IC6001 should be comunicable with the Programme Navi. Back-up Tool. (VFK1493P)
2. The "NAVI" data has to be available in IC6001.

NOTE:

During servicing, do not make short IC6001-pin 37 (5V) with other line/Components, otherwise, IC6001 may be broken.

[2. HOW TO CONFIRM THE "NAVI." DATA WITHOUT INSERTING A TAPE INTO VCR?]

1. Indicate the "NAVI" mark on the Front information Panel.
   (Press the Menu button and select the option, then set the "NAVI" to ON mode.)
2. Turn on the Service Mode and press the "NAVI" button on the Remote Controller in more than 5 seconds.
   The "NAVI" date list is displayed on the Monitor.
   (Press the "MENU" button on the Remote Controller for cancellation.)

[3. REPLACING PROCEDURE IN STEPS]

STEP 1. PREPARATION

1. Remove the C.B.A. with Mechanism unit by referring the Disassembly procedure.
2. Connect the VFK1493P by referring the following figure.

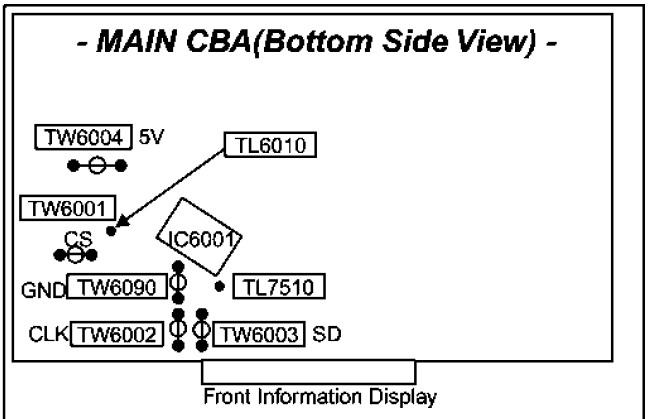

VFK1493P (Terminal Name)	MAIN CBA (Place to be connect)
5V	TW6004
CS(Chip Select)	TW6001
CLK(S.Clock)	TW6002
DATA(S.DATA)	TW6003
GND	TW6090

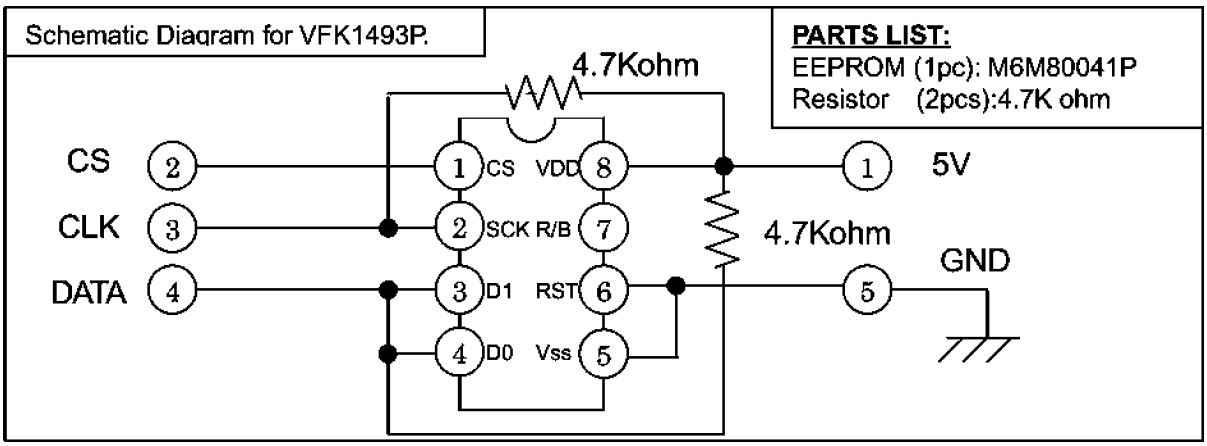

STEP 2. "NAVI" DATA BACK-UP

	PROCEDURE	F.I.P. DISPLAY
Turn on the Service Mode.		
1.	Press FF and EJECT keys simultaneously for more than 3 seconds.	0 00 00
Turn on the Service Mode 2.		
2.	Press FF and EJECT keys in twice.	2 00 00
Turn on the Set-up mode.		
3.	Press the EJECT key for more than 3 seconds.	2 00
Turn on the mode 6.		
4.	Press the CH UP key in 3 times.	2 6 00
Activate the Back-up.		
5.	Press the FF key for more than 3 seconds.	2 6 **
(OK)	"UP" is displayed when the Back-up process has been done successfully.	2 6 up
(NG)	"31" is displayed when the Back-up process has not been done successfully.	2 6 31
	("31" is displayed mainly when the connection failure and ROM failure of VFK1493P occurred. Confirm them and try again.)	

STEP 3. REPLACE THE IC6001 AND/OR B6001

1. Disconnect the AC plug and replace the IC6001 and/or B6001. (Do not make a short circuit between IC6001-pin 37 and other pins/components.)

   CAUTION:

   *When replacing the B6001, be sure to read/follow the "HOW TO REPLACE THE LITHUM BATTERY" section.

STEP 4. RESET THE IC6001 AT ONCE

1. Connect the AC plug.
2. Connect a jumper wire between TL7510 and TW6090 (GND) for a second to reset the Microprocessor IC6001.

Note:

Since the resistance at pin 1 as well as pin 2 of IC6001 decides the model distinction data, no need to set up the Model code, which is necessary in previous model.

STEP 5. LINE INPUT SETTING

1. Connect the 1.5 V battery to TL6010 or Pin 6 of IC6001 until the FIP displays unreadable irregular characters.
2. Disconnect the AC plug for few seconds and connect it again.
3. Confirm that "A1" and "A2" can be displayed on the FIP by pressing the CH UP and CH DOWN buttons.

Note:

1. To set-up the "Plug in Auto Tuner Preset", press the Channel up and down keys simultaneously for 3 seconds.
2. Change the OSD setting to the Factory shipping condition if necessary, by referring following charts.

OPTION	1/2
OSD	• ON OFF
TAPE SELECT	• T120 T160 T180
BLUE BACK	• ON OFF
JET NAVIGATOR	ON • OFF
DELETE NAVI DATA	• NO YES
JET SEACH	X27 • X35

OPTION	2/2
MTS	• MAIN SAP MONO
DIRECT REC	ON • OFF

STEP 6. NAVI. DATA WRITING/SAVING

1. Connect the Prog. Navi. Data Back-up Tool (VFK1493P)

	PROCEDURE	F.I.P. DISPLAY
Turn on the Service Mode.		
1.	Press FF and EJECT keys simultaneously for more than 3 seconds.	0 00 00
Turn on the Service Mode 2.		
2.	Press FF and EJECT keys in twice.	2 00 00
Turn on the Back-up mode.		
3.	Press the EJECT key in more than 3 seconds.	2 00
Turn on the Back-up mode 6.		
4.	Press the CH UP key for 3 times.	2 6 00
Activate the NAVI. Data Writing.		
5.	Press the REW key in more than 3 seconds.	2 6 **
(OK)	"dn" is displayed when the Back-up process has been done successfully.	2 6 dn
(NG)	"32" is displayed when the Back-up process has not been done successfully.	2 6 32
	("32" is displayed mainly when the connection failure and ROM failure of VFK1493P occured. Confirm them and try again.)	
Reset the Service Mode.		
6.	Press FF and EJECT keys simultaneously in 6 times.	**Normal Indication**
NOTE: Perform the PG SHIFTER ADJUSTMENT.		

1.2. HOW TO REPLACE THE LITHIUM BATTERY

1.2.1. GERNERAL DESCRIPTION

There is a RAM in the IC6001, which is backing up the following data by using the power source of B6001 (Back-up Battery).

1. Programme Navigation Data
2. TV Tuning Data
3. PG Shifter Adjustment Data
4. Option Setting Data

1.2.2. REPLACEMENT PROCEDURE

1. Remove the Top Panel and Mechanism unit with Main C.B.A. by referring the Disassembling Procedure.
2. Unsolder the Lithium Battery: B6001 “CR2354-1GUF” and then replace it into new one. (See Fig.B1)

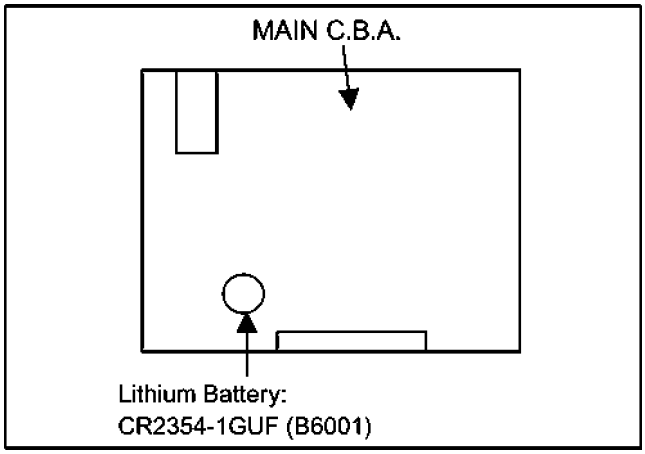

Fig.B1

NOTE:

The lithium battery is a critical component (Type No.:CR2354-1GUF Manufactured by Panasonic.)

It must nerver be subjected to excessive heat or discharge.

It must therefore only be fitted in equipment designed specifically for its use.

Replacement batteries must be of the same type and manufacture.

They must be fitted in the same manner and location as the original battey, with the correct polarity contacts observed.

Do not attempt to re-charge the old battery or re-use it for any other purpose.

It should be disposeed of in waste products destined for burial rather than incineration.

CAUTION

Danger of explosion if battery is incorrectly replaced.
Replace only with the same or equivalent type recommended by the equipment manufacturer.
Discard used batteries according to manufacturer’s instructions.

VARNING

Explosionsfara vid felaktigt batteribyte.
Använd samma batterityp eller en ekvivalent typ som rekommenderas av apparattillverkaren.
Kassera använt batteri enligt fabrikantens instruktion.

ADVARSEL!

Lithiumbatteri - Eksplosionsfare ved fejlagtig håndtering.
Udskiftning må kun ske med batteri af samme fabrikat og type.
Levér det brugte batteri tilbage til leverandøren.

VAROITUS

Paristo voi räjähtää, jos se on virheellisesti asennettu.
Vaihda paristo ainoastaan laitevalmistajan suosittelemaan tyyppiin. Hävitä käytetty paristo valmistajan ohjeiden mukaisesti.

1.3. SERVICE CAUTION-2

1.3.1. CAUTION FOR AUTO TUNING

PROCEDURE

Auto Tuning will start by the following procedure.

1. Connect the DIN-RF Cable.
2. Connect the AC Mains Lead.
3. Turn on the VCR.
   Auto Tuning will start.
   Auto Tuning searches for TV stations from VHF minimum to UHF maximum and memorizes every tuned program position. Other program positions are skipped.

   Auto Tuning takes five or more minutes to complete its search.

   Do not touch the VCR during Auto Tuning.

   Auto Tuning will stop halfway, if the VCR is operated or the aerial lead and/or the mains lead are disconnected.

   In case the VCR stopped during Auto Tuning, the VCR have to be reset and restarted. See the following item 2.

NOTE

1. If the VCR is turned on with the antenna not connected, all channels are skipped. Therefore, firmly connect the antenna and then turn the VCR off and on again to execute Auto tuning.
2. **When Auto Tuning is canceled halfway, Auto Tuning is not executed even if the VCR is turned off and then turned on again.**
   In this case, Auto Tuning have to be restarted by the following procedure.
   a. **Press EJECT and remove the Video cassette.**
   b. **Keep UP and DOWN on the VCR pressed simultaneously for 3 seconds or more during the VCR on.**
   The channel displayed on the VCR display disappears for a moment then changes to 2.
   c. **Turn off the VCR and then turn it on. Auto Tuning commences.**
3. If you turn the VCR off during Auto Tuning, Auto Tuning will stop halfway.
   The VCR should be reset and restarted by the item 2 in order to execute Auto Tuning.
4. If the VCR starts playback during Auto Tuning, Auto Tuning will stop halfway.
   The VCR should be reset and restarted by the item 2 in order to execute Auto Tuning.
5. To cancel Auto Tuning Mid-operation, press POWER during Auto Tuning (The VCR is turned off).
6. When the VCR is moved to the other area or country, TV broadcasts should be stored again.

1.3.2. CHECKING OF MAIN C.B.A.

When servicing the MAIN C.B.A., take out the MAIN C.B.A. and mechanism from the frame and turn over.

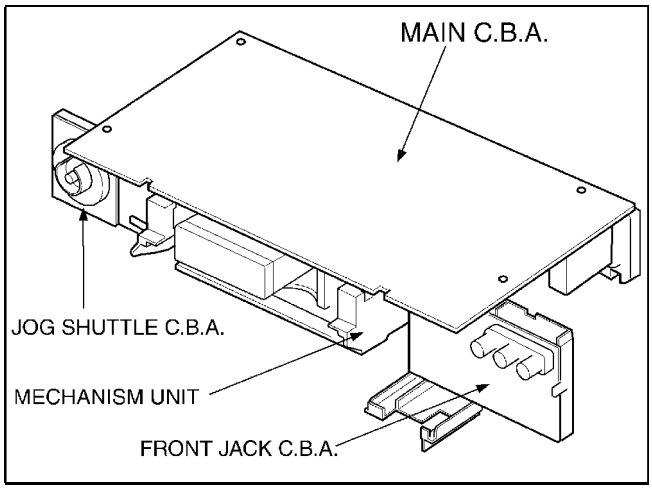

Fig. S3

1.3.3. REMOVAL OF CASSETTE TAPE

There are 2 ways to remove a cassette tape.

1. Removal of compulsory loading.
   a. Press FF and EJECT buttons simultaneously and set the Service Mode 7.
   b. Press STOP button in order to unload the mechanism. (Pay an attention of tape slack)
   Service Mode Indication:
   7 ** ** (STOP) → 7 00 ** (EJECT)
2. Removal of manual operation of Main cam gear.
   a. Disconnect the AC power cord and remove Top Panel.
   b. Rotate Main Cam Gear to the clockwise and unload the mechanism (Tape is remaining) (Fig. S4).

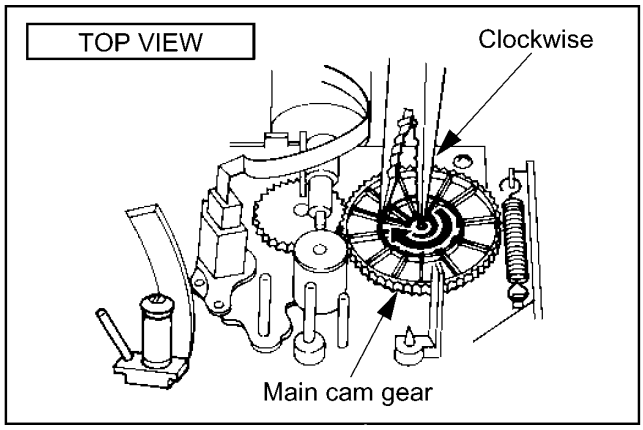

Fig. S4

   c. Rotate the Pole of Capstan motor to the clockwise the from the bottom in order to remove the tape slag.

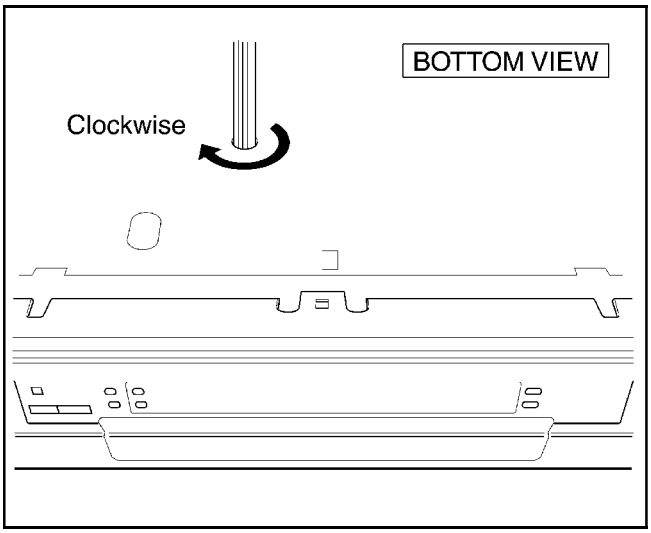

Fig. S5

d. Rotate Main Cam Gear to the clockwise in order to eject the cassette tape.

1.3.4. CYLINDER UNIT REPLACEMENT

1. CYLINDER UNIT REPLACEMENT
   a. Remove the Mechanism unit from MAIN C.B.A./Chassis by referring “Disassembly Procedure”.
   b. Remove the 3 screws (A) of the CYLINDER UNIT with a screw driver.
   c. Unlock the 4 locking tabs (B) and disconnect the Cylinder flexible card from the FPC Holder.
   d. Remove the CYLINDER UNIT.

CAUTION

Handle the Cylinder flexible card with care. When it damaged, you should replace whole Cylinder unit.

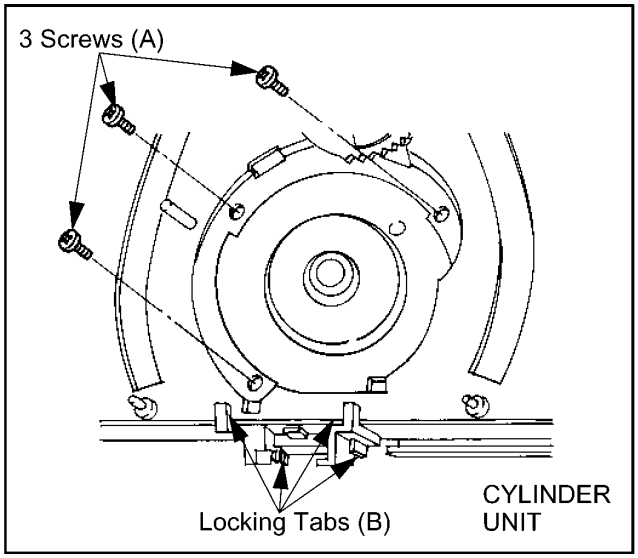

Fig. S6

2. UPPER CYLINDER DISASSEMBLY
   a. Remove 2 screws (A).
   b. Remove the Cylinder Stator Unit.
   c. Remove 2 screws (B).
   d. Remove the Cylinder Rotor Unit.
   e. Loose Hex screw (C) (1.5 mm) and remove the CYLINDER RETAINER.
   f. Remove the Upper Cylinder.

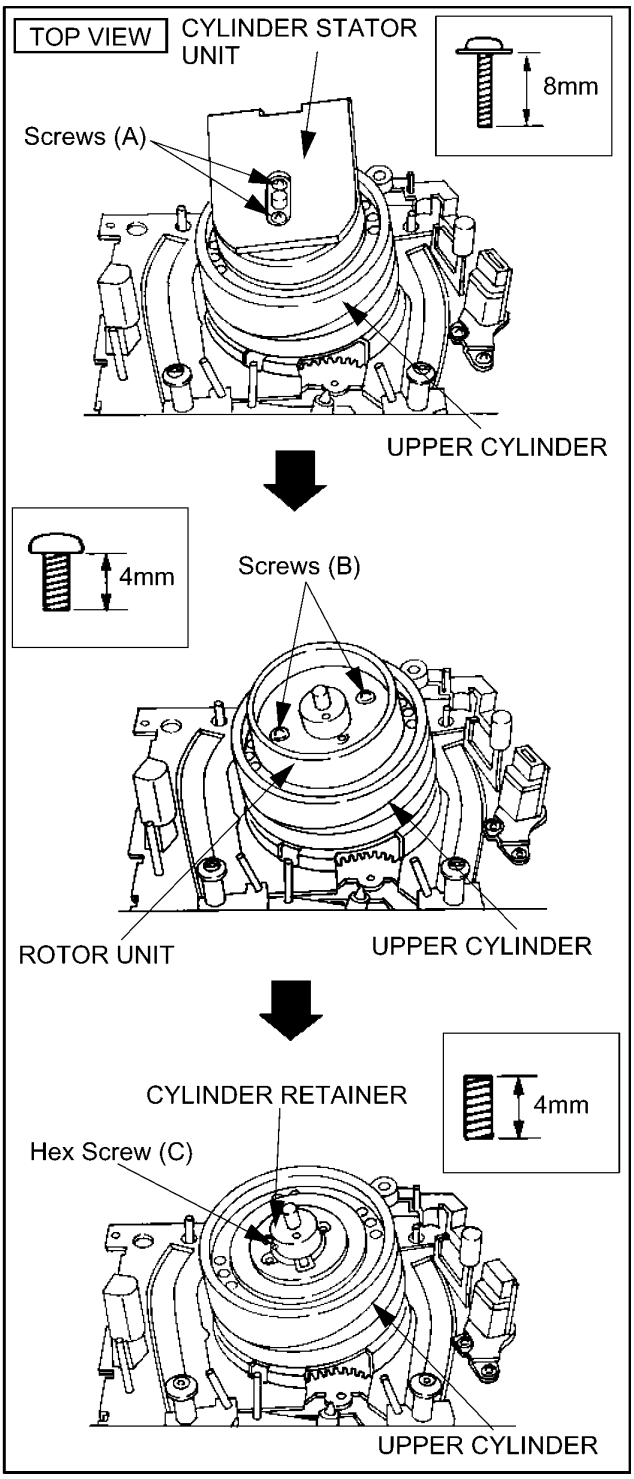

Fig. S7

3. UPPER CYLINDER ASSEMBLY

When reassembling, perform the steps in the reverse order.

Notes:

a. Install the Cylinder Retainer so that the 2 holes on top of the Cylinder Retainer are at right angles with the P5001 Connection.
b. Tighten the Hex screw (C) (1.5 mm) while pressing down on top of the Cylinder Retainer.

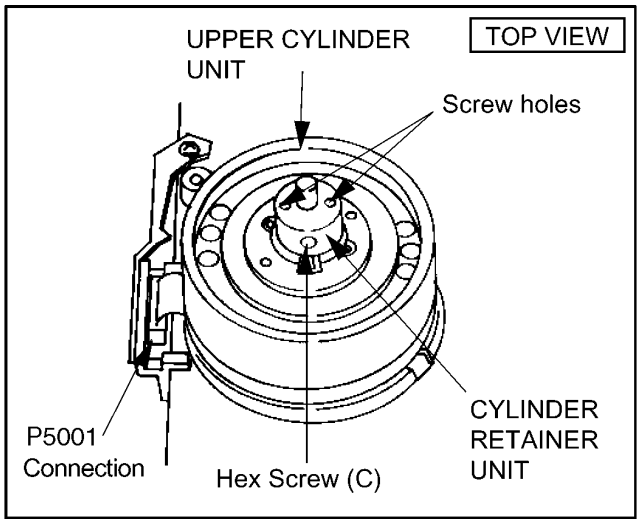

Fig. S8

c. Install the Cylinder Rotor Unit so that the inner hole of the Cylinder Rotor Unit fits to the small projection (D) on top of the Upper Cylinder.

d. Tighten 2 screws (B).

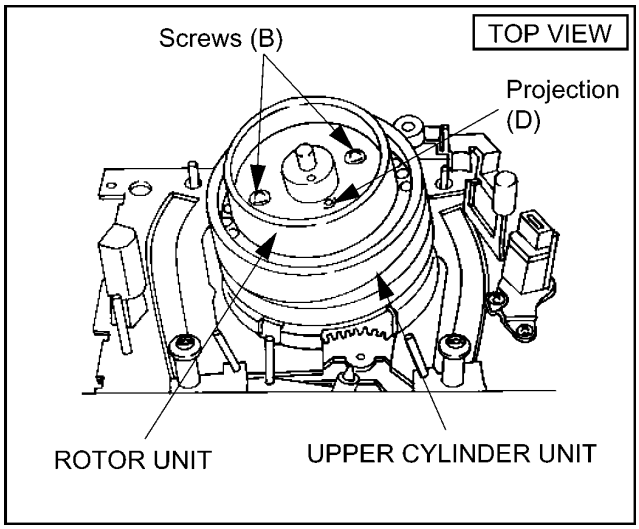

Fig. S9

e. Install the Cylinder Stator Unit.

f. Tighten 2 screws (A).

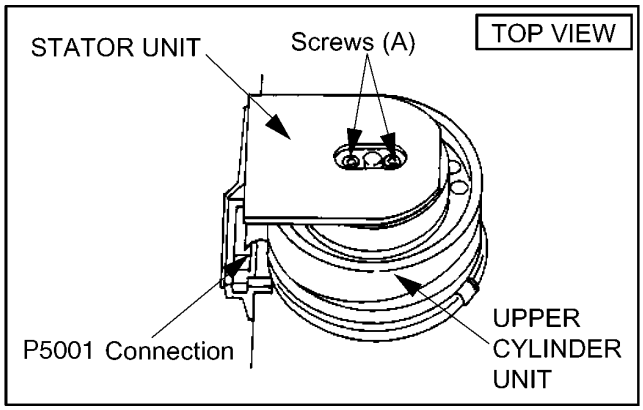

Fig. S10

g. Confirm the PG SHIFTER ADJUSTMENT with the alignment tape (NTSC: VFM8080HQFP) and adjust it if necessary.

1.3.5. FLAT CARD CABLE INSTALLATION

When installing the Flat Card Cable on the connector, install the Flat Card Cable with the cable contacts facing the connector contacts.

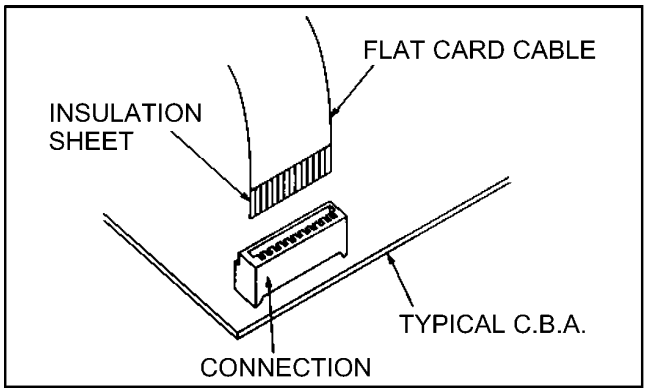

Fig. S11

1.4. SELF-TEST & SERVICE INFORMATION DISPLAY

Refer to the Service Manual for Z Mechanism Chassis. (Order No.:VRD9802005C2)

2 ADJUSTMENT PROCEDURES

2.1. DISASSEMBLY METHOD

2.1.1. DISASSEMBLY FLOW CHART

This flow chart indicates disassembly steps of the cabinet parts and the circuit boards in order to find the necessary items for servicing.

When reassembling, perform the steps in the reverse order.

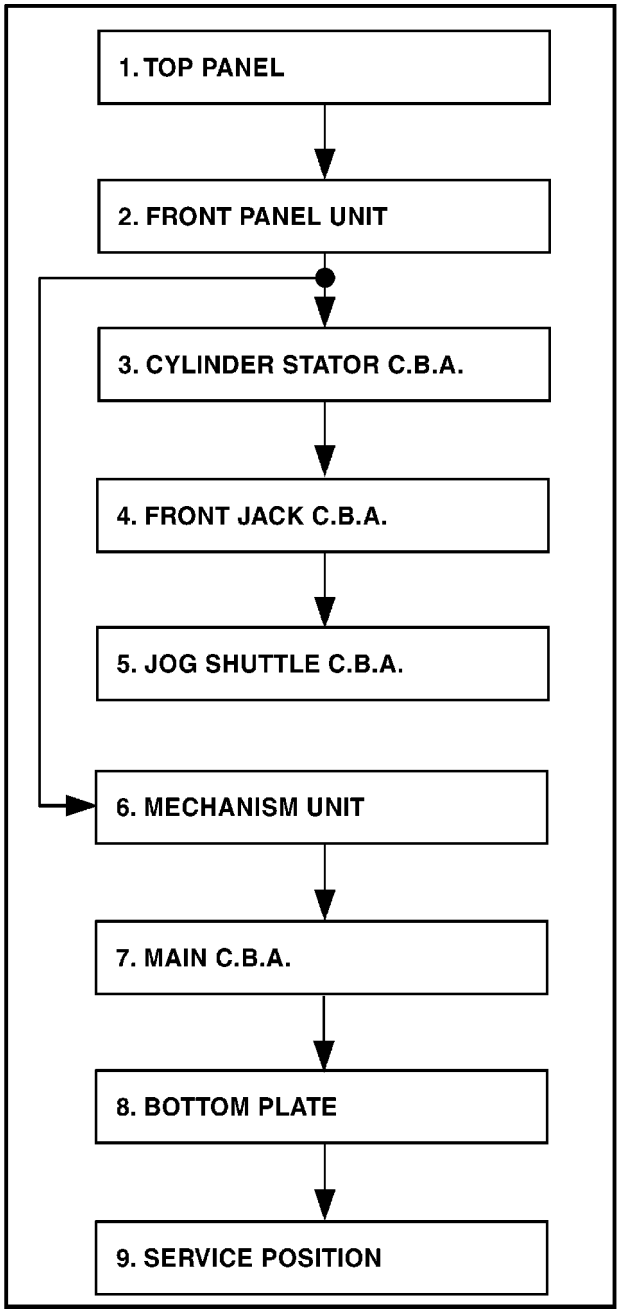

Fig. D1

2.1.2. DETAIL OF DISASSEMBLY METHOD

1. REMOVAL OF THE TOP PANEL

Remove	2 Screws (A)

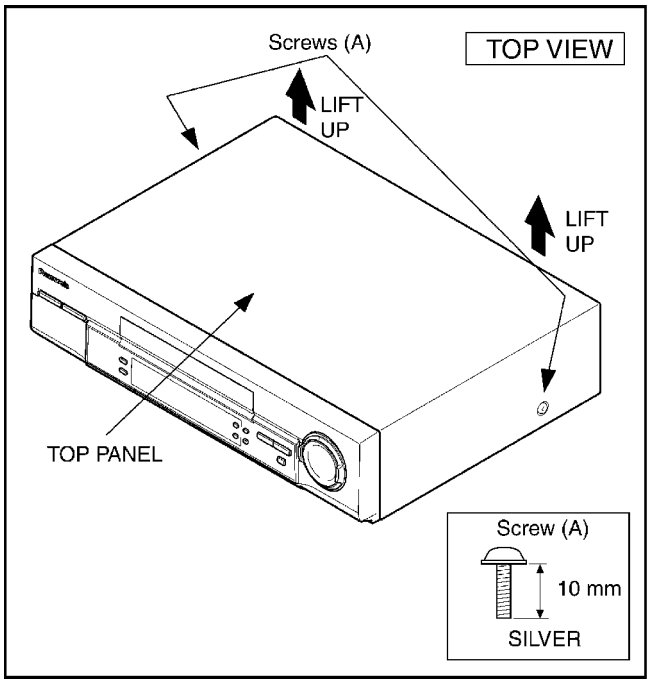

Fig. D2

2. REMOVAL OF THE FRONT PANEL UNIT

Pull out	JOG and SUTTLE Knob (B-1)
Unlock	7 Tabs (B-2)

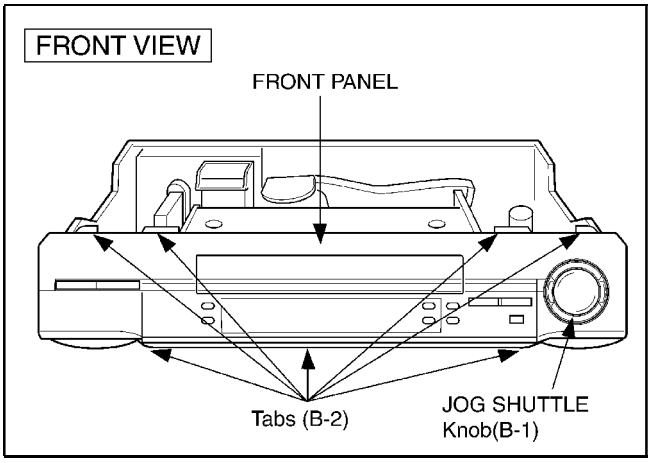

Fig. D3

3. REMOVAL OF THE CYLINDER STATOR C.B.A.

Remove	2 Screws (C)
Disconnect	Flat Card Cable (D)

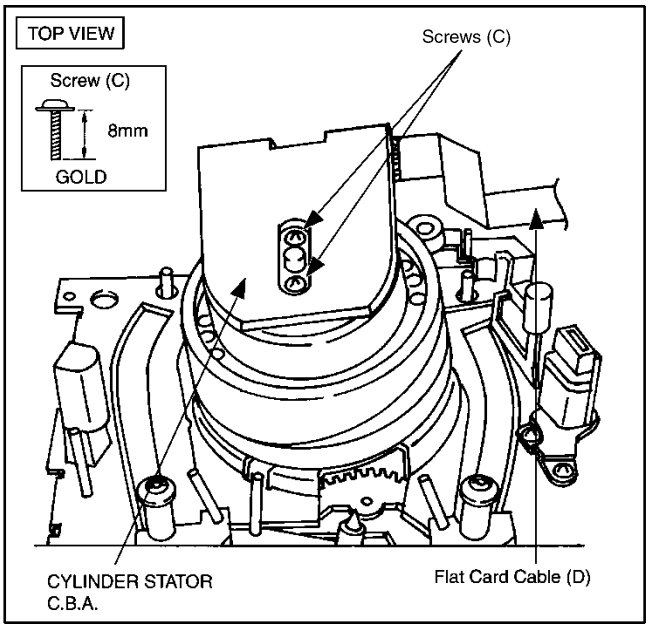

Fig. D4

4. REMOVAL OF THE FRONT JACK C.B.A.

Unlock	2 Claws (E) Connector PS4801
Unlock	3 Tabs (F)

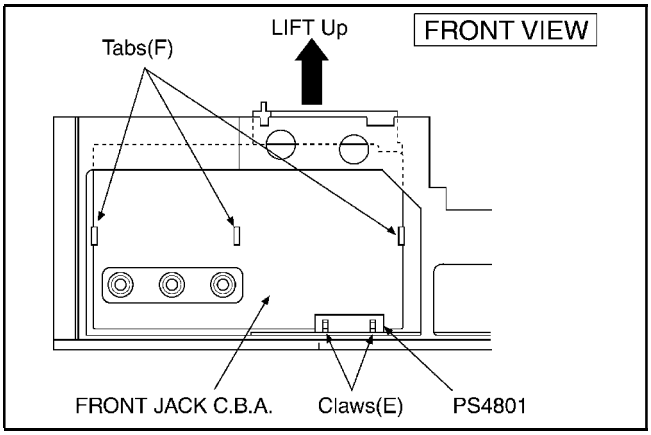

Fig. D5

5. REMOVAL OF THE JOG SHUTTLE C.B.A.

Unlock	2 Claws (G) Connector PS6301
Unlock	2 Tabs (H)

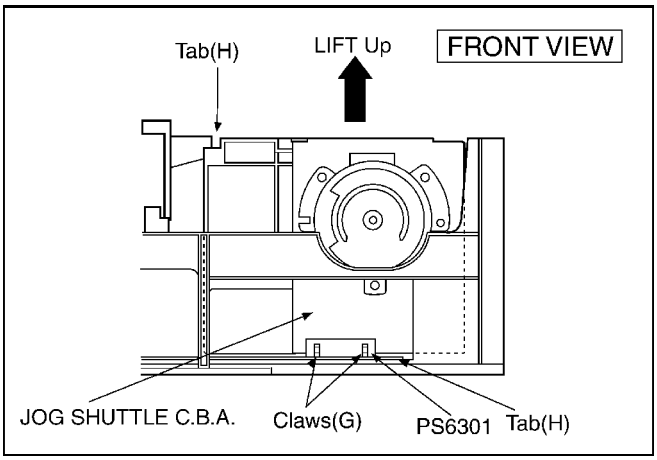

Fig. D6

6. REMOVAL OF THE MECHANISM UNIT

Remove	3 Screws (I)
Remove	2 Screws (J)
Remove	Screw (K)

NOTE:

Keep pressing 2 stoppers on the Cassette Holder Plate and press the Cassette Holder Plate to the rear.

[CAUTION -Mounting the Mechanism unit to Main C.B.A.]

a. **When assembling, insert the Cylinder Flexible card to the Connector (P5001) carefully, to avoid any damage.**

b. **Be sure to tighten the Screw (K), otherwise, S/N ration may become worse.**

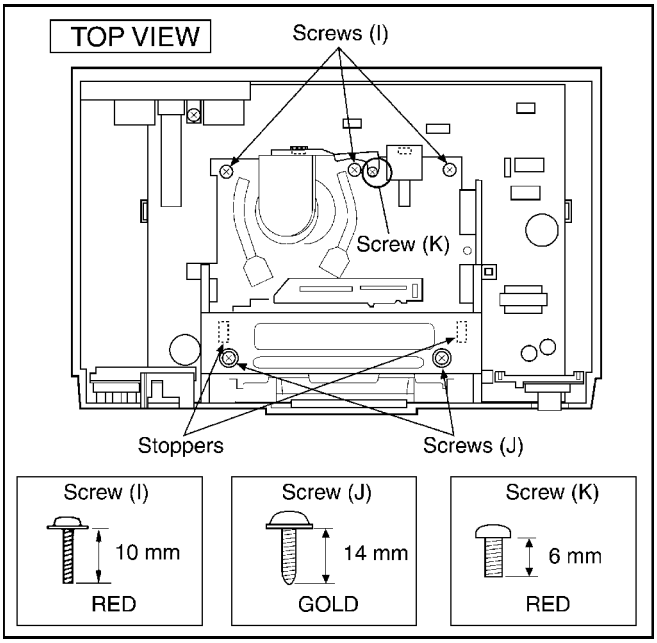

Fig. D7-1

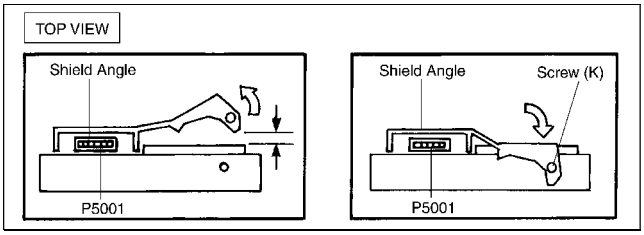

Fig. D7-2

7. REMOVAL OF THE MAIN C.B.A.

Disconnect	4 Screws (L)
Unlock	4 Tabs (M)

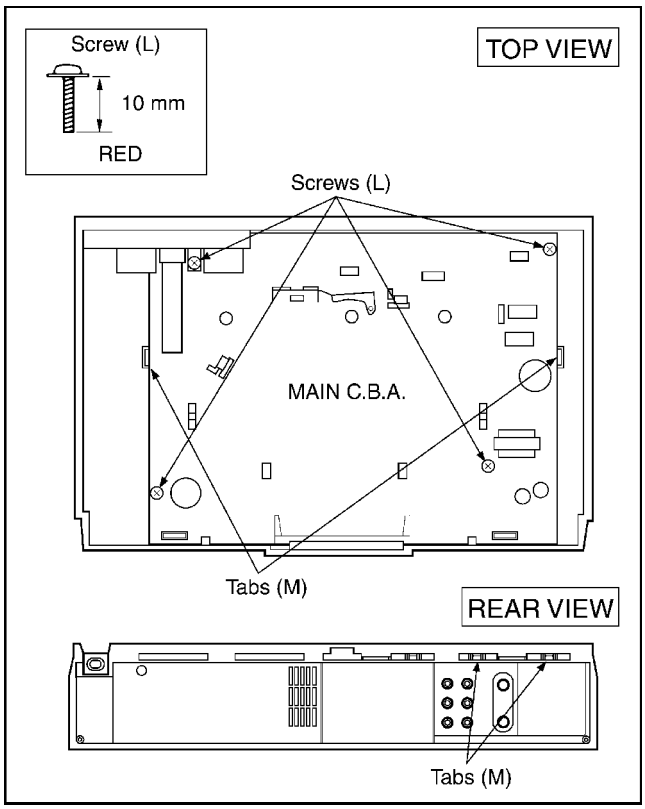

Fig. D8

8. REMOVAL OF THE BOTTOM PLATE

Unlock	12 Tabs (N)

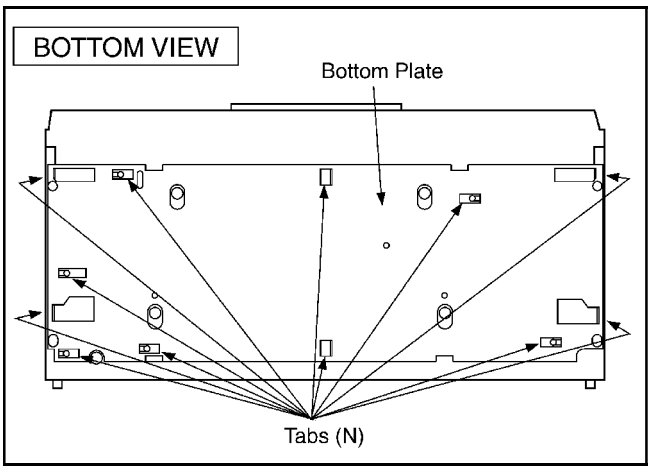

Fig. D9

9. SERVICE POSITION

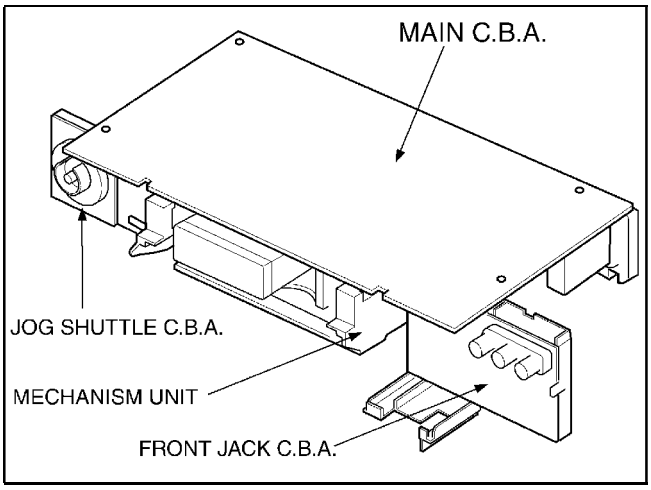

Fig. D10

2.2. MECHANICAL ADJUSTMENT PROCEDURES

Refer to the Service Manual for Z-Mechanism Chassis.
(Order No. VRD9802005C2)

2.3. ELECTRICAL ADJUSTMENT PROCEDURES

This section provides complete adjustment procedures required for electric circuits of VCR.

2.3.1. TEST EQUIPMENT

To perform electrical adjustments following equipment is required.

1. VHS Alignment Tape. (VFM8080HQFP)
2. Monitor

2.3.2. SERVO SECTION

PG SHIFTER ADJUSTMENT

	PROCEDURES	DISPLAY
1.	To set Service Mode, press the FF and EJECT keys simultaneously for more than 3 seconds.	0 00 00
2.	To set Service Mode 2, press the FF and EJECT keys simultaneously three times.	2 00 00
3.	Press the EJECT key for more than three seconds. Digit of minite is put out light.	2 00 00
4.	Indicate 1 in the digit of minute by pressing the channel up/down keys. (When the channel up key is pressed, 1 will be indicate in the digit of minute.)	2 01 00
5.	Insert the Alignment Tape. (VFM8080HQFP)	2 01 00
6.	This adjustment is automatically started after VCR goes PLAY mode. (During the adjustment, the picture will be appeared on the monitor.)	2 01 00
7.	When this Adjustment is terminated, the following operation will be activated. ・Adjustment completed: The tape will be ejected. ・Adjustment incompleted: "F2*" is indicated on the FIP.Check the Servo/System Control circuit and Cylinder Unit.	
8.	To release Service Mode 2, press FF and EJECT keys Simultaneously six times.	

2.3.3. CIRCUIT BOARD LAYOUT

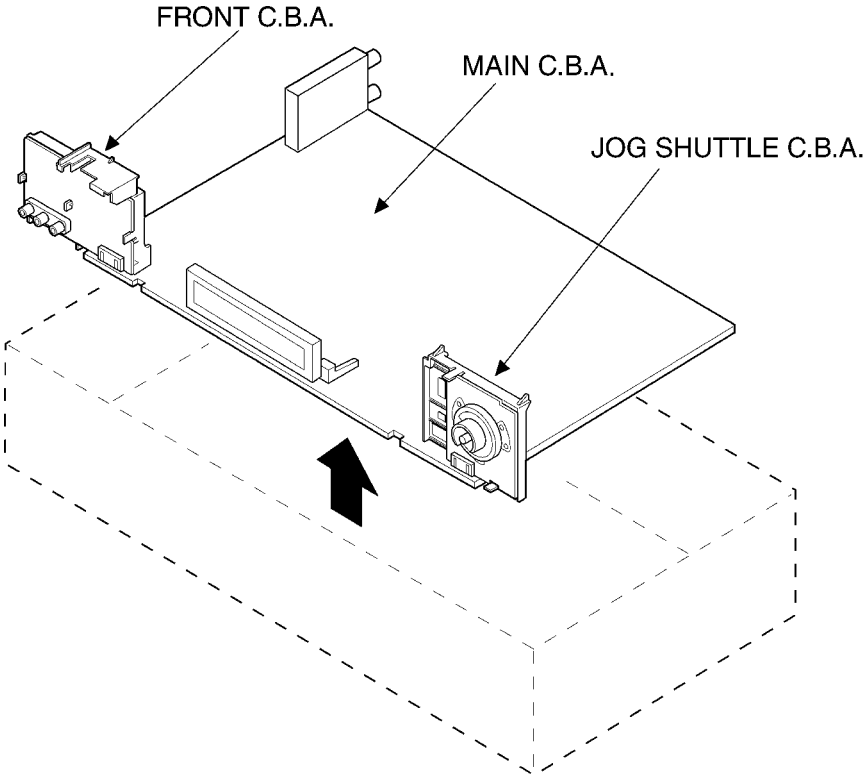

3 ABBREVIATIONS

443NT [L]	4.43 NTSC Ⓛ	BIL. [H]	BILINGUAL Ⓗ
A. COMP	AUDIO COMPONENT SIGNAL	BIL/M1[L]	BILINGUAL Ⓛ
A. COMPO	AUDIO COMPONENT SIGNAL	BS CLOCK	BS CLOCK
A. D.P [L]	AUDIO DUBBING PAUSE Ⓛ	BS DATA	BS DATA
A. D/L [L]	AUDIO DUBBING PAUSE Ⓛ	BS LCH IN	BS L CHANNEL INPUT
A. DEF [S]	AUDIO DEFEAT	BS MIX [H]	BS MIX Ⓗ
A.DEF [S] [L]	AUDIO DEFEAT	BS MON [H]	BS MONITOR Ⓗ
A. DUB P [L]	AUDIO DUBBING PAUSE Ⓛ	BS MONI [H]	BS MONITOR Ⓗ
A. DUB [H]	AUDIO DUBBING Ⓗ	BS RCH IN	BS R CHANNEL INPUT
A. ERASE	AUDIO ERASE	BS VIDEO	BS VIDEO SIGNAL
A. H. SW	AUDIO HEAD SWITCHING PULSE	BS VIDEO/BS1	BS VIDEO SIGNAL
A. HEAD [R]	AUDIO HEAD (REC)	BS [H]	BS Ⓗ
A. HEAD [W]	AUDIO HEAD (PLAY)	BS. LEVEL	BS LEVEL
A. IN [L]	AUDIO INPUT (L)	BS. M [H]	BS MONITOR Ⓗ
A. IN [R]	AUDIO INPUT (R)	BS/VTR [H]	BS/VTR Ⓗ
A. MUT [H]	AUDIO MUTE Ⓗ	BUS CLK	BUS CLOCK
A. MUTE [H]	AUDIO MUTE Ⓗ	BUS LSN	BUS LISTEN
A. OUT [L]	AUDIO OUTPUT (L)	BUS TLK	BUS TALK
A. OUT [R]	AUDIO OUTPUT (R)	BUZZER	BUZZER
A. RF OUT	AUDIO RF SIGNAL OUTPUT	CAP EC	CAPSTAN TORQUE CONTROL
A/VS/S. DATA	AV SW/SERIAL DATA	CAP M GND	CAPSTAN MOTOR GND
AC ONLINE	AC ONLINE	CAP. ET	CAPSTAN TORQUE CONTROL
AC. O/EE. H	AC ONLINE/EE Ⓗ	CAP. FG1	CAPSTAN FG1 PULSE
AFC S C	AFC S CURVE	CAP. FG2	CAPSTAN FG2 PULSE
AFC [S]	AFC S CURVE	CAS. SW	CASSETTE SW
AFC. DEF	AFC DEFEAT	CCN	PLAYBACK CONTROL SIGNAL (–)
ARFC OUT	AUDIO RF SIGNAL OUTPUT	CCP	PLAYBACK CONTROL SIGNAL (+)
ART. V	ARTIFICIAL VERTICAL SYNC SIGNAL	CHM	CONTROL SIGNAL (+)
ART. V. MM	ARTIFICIAL VERTICAL SYNC SIGNAL MONO MULTI	CHP	CONTROL SIGNAL (–)
		CINEM [L]	CINEMA Ⓛ
ART. V/H/N	ARTIFICIAL VERTICAL SYNC SIGNAL Ⓗ / NORMAL	CINEMA [L]	CINEMA Ⓛ
		CINEMA/MIX	CINEMA/MIX
AT. V/H/N	ARTIFICIAL VERTICAL SYNC SIGNAL	CKL	RATCH LOCK
ATSW/TEST/NOR/SE	TEST/NORMAL/SERVICE	CKS	SHIFT LOCK
AUDIO IN [L]	AUDIO INPUT (L)	CL	CLOCK
AUDIO IN [R]	AUDIO INPUT (R)	CLK	CLOCK
AUDIO OUT [L]	AUDIO OUTPUT (L)	CLK (C.G)	CLOCK
AUDIO OUT [R]	AUDIO OUTPUT (R)	CLOCK. IN	CLOCK INPUT
AUDIO SELECT [H]	AUDIO SELECT Ⓗ	CLP	CLAMP
AUDIO. L	AUDIO (L)	COL/B/W/NOR	COLOUR/BLACK & WHITE/NORMAL
AUDIO. R	AUDIO (R)	COLOR [H]	COLOUR Ⓗ
AV CNT	AV CONTROL	CONV	CONVERTOR
AV CTL	AV CONTROL	CS	CHIP SELECT
AV CTL/S. CLK	AV CONTROL/SERIAL CLOCK	CTL GND	CONTROL GND
AV. C.M.	AV CONTROL MODE	CTL HEAD [+]	CONTROL HEAD (+)
AVCNT/METER. R	AV CONTROL/LEVEL METER(R)	CTL HEAD [–]	CONTROL HEAD (–)
AVSW/METER. L	AV SW/LEVEL METER (L)	CTL[+]	CONTROL HEAD (+)
B MODE. H	B MODE Ⓗ	CTL[–]	CONTROL HEAD (–)
B.G.P	BURST GATE PULSE	CUE BIAS	CUE BIAS
BACKUP 5V	BACK UP 5V	CURRENT LIM	CURRENT LIMITER
BAND. U.E.	BAND U	CYL ET	CYLINDER TORQUE CONTROL
BANDVL. D	BAND VL	CYL GND	CYLINDER GND
BI/MI [L]	BILINGUAL/MIX Ⓛ	D.F.M. REC [H]	DELAYED FM RECORDING Ⓗ
BIL	BILINGUAL	D. FM REC [L]	DELAYED FM RECORDING Ⓛ
BIL [L]	BILINGUAL Ⓗ	D. GND	DIGITAL GND

D. REC [H]	DELAYED RECORDING Ⓗ	H.SYNC	HORIZONTAL SYNC
D4/S. LED	D4/STILL LED	H. AMP. SW	HEAD AMP SW PULSE
D4/STILLED	D4/STILL LED	H. P <R>	HEAD PHONE (R)
DAC [CLK]	TUNER DAC (CLOCK)	H. P <L>	HEAD PHONE (L)
DAC/FSCS	TUNER DAC/FS CHIP SELECT	H. P GND	HEAD PHONE GND
DAREC [H]	DELAYED AUDIO RECORDING Ⓗ	H. P OUT [L]	HEAD PHONE OUTPUT (L)
DATA	DATA	H. P OUT [R]	HEAD PHONE OUTPUT (R)
DECODER [L]	DECODER (L)	H. SW	HEAD SW PULSE
DECODER [R]	DECODER (R)	HEAD PHONE [L]	HEAD PHONE (L)
DEW	DEW	HEAD PHONE [R]	HEAD PHONE (R)
DEW SNS	DEW SENSOR	HEAD SW	HEAD SW
DFMRE [H]	DELAYED FM AUDIO RECORDING Ⓗ	HEATER [+]	HEATER (+)
E. REC 5V	EXCEPT RECORDING 5V	HEATER [–]	HEATER (–)
EC	ERROR TORQUE CONTROL	HSS	HORIZONTAL SYNC SIGNAL
ECR	ERROR TORQUE CONTROL	HTR [+]	HEATER (+)
	REFERENCE VOLTAGE	HTR [–]	HEATER (–)
EDT TRIG [L]	EDIT TRIGGER Ⓛ	I RFE	REFERENCE CURRENT
EDIT [H]	EDIT Ⓗ	ICL	CONTROL AGC CIRCUIT
EE [H]	EE Ⓗ	IF	INTERMEDIATE FREQUENCY
EE [H]/INS [M]	EE Ⓗ/INSERT Ⓜ	IN SELA 1	INPUT SELECT A1 POSITION
EE. VV. TR	EE/VV/TRICK PLAY	IN SELA 2	INPUT SELECT A2 POSITION
EJECT. PO	EJECT POSITION	IN SELA 3	INPUT SELECT A3 POSITION
EJECT/VDET	EJECT/REVERSE SLOW LOCK	INS L/R [L]	INSERT Lch/Rch Ⓛ
ENV. SEL	ENVELOPE SELECT	INS. [H]	INSERT Ⓗ
ENVE. OUT	ENVELOPE OUTPUT	INSEL A1	INPUT SELECT A1 POSITION
ENVE. SEL	ENVELOPE SELECT	INSEL A2	INPUT SELECT A2 POSITION
ENV SELECT	ENVELOPE SELECT	INSERT	INSERT
EP [H]	LP Ⓗ	INSERT [H]	INSERT Ⓗ
EP/LP [H]	LP Ⓗ	IO CS	INPUT/OUTPUT CHIP SELECT
EP/ LP/SP	LP/SP	JOG1	JOG1
EP/SS [H]	LP/SLOW/STILL/STOP Ⓗ	JOG S3 LED/FOWRD	JOG LED/FORWARD LED
EPROMCS	EPROM CHIP SELECT	JOG/F. LED	JOG LED/FORWARD LED
EX. REC 5V	EXCEPT RECORDING 5V	JSB [H]	JSB Ⓗ
FF/REW [L]	FAST FORWARD/REWIND Ⓛ	JST. CLCK	JUST CLOCK
FG1 IN	FG1 PULSE INPUT	JST. CLK	JUST CLOCK
FG2 IN	FG2 PULSE INPUT	JST. CLOCK	JUST CLOCK
FILTER ADJ.	FILTER ADJUSTMENT	L. OUT	Lch OUTPUT
FLY ERASE [H]	FLYING ERASE HEAD ON Ⓗ	L. CH [H]	Lch Ⓗ
FLY ON [H]	FLYING ERASE HEAD ON Ⓗ	L. CH [L]	Lch Ⓛ
FLY. E [H]	FLYING ERASE HEAD ON Ⓗ	LED (MAIN)	LED (MAIN)
FM MUT [H]	FM AUDIO MUTE Ⓗ	LED (STEREO)	LED (STEREO)
FM MUTE [H]	FM AUDIO MUTE Ⓗ	LED (SUB)	LED (SUB)
FM OUT [L]	FM OUTPUT (L)	LED CKL	LED SERIAL CLOCK
FM OUT [R]	FM OUTPUT (R)	LED CKS	LED SERIAL CLOCK
FM PACK OUT [L]	FM PACK OUTPUT (L)	LED DATA	LED SERIAL DATA
FM PACK OUT [R]	FM PACK OUTPUT (R)	LINE IN 1 [L]	LINE INPUT 1 (L)
FM/BS SEL [L]	FM/BS SELECT (L)	LINE IN 1 [R]	LINE INPUT 1 (R)
FM/BS SEL [R]	FM/BS SELECT (R)	LINE IN 2 [L]	LINE INPUT 2 (L)
FS. CLK	FS CLOCK	LINE IN 2 [R]	LINE INPUT 2 (R)
FUL. E [H]	FULL ERASE HEAD ON Ⓗ	LINE IN V	LINE INPUT VIDEO
FULL. E [H]	FULL ERASE HEAD ON Ⓗ	LINE IN [L]	LINE INPUT (L)
FULL. E. 12V	FULL ERASE 12V	LINE IN [R]	LINE INPUT (R)
GND [A]	GND (ANALOGUE)	LINE OUT [L]	LINE OUTPUT (L)
GND [TU]	GND (TUNER)	LINE OUT [R]	LINE OUTPUT (R)
GND/N. SW. 12V	GND/NON SW 12V	LP [H]	LP Ⓗ

LPTRI [L]	LP TRICK PLAY Ⓛ	P. OFF [L]	POWER OFF Ⓛ
Lch/A. DUB	Lch/AUDIO DUBBING	PAL [H]	PAL Ⓗ
M GND	MOTOR GND	PAL [L]/NTSC [H]	PAL Ⓛ/NTSC Ⓗ
M REG	MOTOR REGULATOR	PB ADJ. OUT	PLAYBACK ADJUST OUTPUT
MAIN OUT	MAIN OUTPUT	PB OUT	PLAYBACK OUTPUT
MAIN [L]	MAINⓁ	PB. H	PLAYBACK Ⓗ
MAIN/MONO	MAIN/MONAURAL	PFG	PG/FG
MAX IN	MAXIMUM INPUT	PHOTSN 1B	PHOTO SENSOR 1B
MES [H]	MESECAM Ⓗ	PICT. CNT	PICTURE CONTROL
MESE [H]	MESECAM Ⓗ	PLAY LED/RVS LED	PLAY LED/REVERSE LED
MESE [L]	MESECAM Ⓗ	PLAY. PO	PLAY POSITION
METER 5V	LEVEL METER 5V	PLAY/R.LED	PLAY LED/REVERSE LED
METER [L]	LEVEL METER (L)	PLY/DEW	PLAY/DEW Ⓗ
METER [R]	LEVEL METER (R)	POWER OFF [L]	POWER OFF Ⓛ
METER. L/AVS	LEVEL METER (L)	PREROLL [H]	PREROLL Ⓗ
METER. R/AVC	LEVEL METER (R)	PWRFAIL	POWER FAILURE DETECT
MI/BI [L]	MIX Ⓗ /BILINGUAL	R. CH [H]	Rch Ⓗ
MIC GND	MIC GND	R. CH [L]	Rch Ⓛ
MIC IN	MIC INPUT	R. ST	RESET
MIC IN [L]	MIC INPUT (L)	R/S/F	REVERSE Ⓗ/STOP Ⓜ/FORWARD Ⓛ
MIC IN [R]	MIC INPUT (R)	RCH [H]	Rch Ⓗ
MIC [H]	MICⓗ	REC 12V	RECORDING 12V
MIX [H]	MIXⓗ	REC CHROMA	RECORDING CHROMINANCE SIGNAL
MIX [H]/CINEMA [L]	MIXⓗ/CINEMA SOUND Ⓛ	REC H	RECORDINGⓗ
MIX/ CINE	MIXⓗ/CINEMA SOUND Ⓛ	REC IN	RECORDING INPUT
MIX/CINEMA [L]	MIXⓗ/CINEMA SOUND Ⓛ	REC OUT [L]	RECORDING OUTPUT Ⓛ
MN. H/M. L	MONAURALⓗ/MAINⓁ	REC START	RECORDING START
MN. H/MAI. L	MONAURALⓗ/MAINⓁ	REC VR [C]	RECORDING VOLUME (COMMON)
MN2/MES. L	MONAURAL 2/MESECAMⓁ	REC VR [L]	RECORDING VOLUME (L)
MODE SEL	AUDIO MODE SELECT	REC VR [R]	RECORDING VOLUME (R)
MODE SW	AUDIO MODE SW	REC Y	RECORDING LUMINANCE SIGNAL
MODE. S. IN	AUDIO MODE SELECT INPUT	REC [H]	RECORDINGⓗ
MODE. S. OUT	AUDIO MODE SELECT OUTPUT	REC. C	RECORDING CHROMINANCE SIGNAL
MONO [H]	MONAURALⓗ	REC. Y	RECORDING LUMINANCE SIGNAL
MONO [H]/MAIN [L]	MONAURALⓗ/MAINⓁ	REC/EE CTL	RECORDING/EE CONTROL
MONO2 [L]	MONAURAL 2 Ⓛ	REEL-T	REEL PULSE(TAKE-UP)
MONO2/MESE[FM(L)]	MONAURAL 2/MESECAM (FM Ⓛ)	REEL-S	REEL PULSE (SUPPLY)
MOTOR GND	MOTOR GND	REGULATOR FILTER	REGULATOR FILTER
MUTE	MUTE	RESET	RESET
N. A. REC [L]	NORMAL AUDIO RECORDINGⓁ	REV M F/R	REVIEW MOTOR FORWARD/REVERSE
N. SW 12V	NON SW 12V		
N. SW. 5. DET	NON SW 5V DETECT	REV M V1	REVIEW MOTOR V1
NICAM	NICAM	REV M V2	REVIEW MOTOR V2
NICAM [L]	NICAMⓁ	REV MOTOR F/R	REVIEW MOTOR FORWARD/REVERSE
NOL [H]	PAL Ⓗ/4.43 NTSC Ⓜ/3.58 NTSC Ⓛ		
NOR/SOFT [H]	NORMAL/SOFT TAPE PLAYⓗ	REV MOTOR V1	REVIEW MOTOR V1
NORMAL [H]	NORMAL Ⓗ	REV MOTOR V2	REVIEW MOTOR V2
NR BIAS	NR BIAS	REV MOTOR [+]	REVIEW MOTOR (+)
NTSC [L]	NTSC Ⓛ	REV MOTOR [–]	REVIEW MOTOR (–)
OCH	CONTROL AGC CIRCUIT	REV. M. GND	REVIEW MOTOR GND
OUT	OUTPUT	RF.CHROMA	RF CHROMINANCE SIGNAL
P-OFF [H]	POWER OFF Ⓗ	RF OUT	RF OUTPUT
P-OFF [L]	POWER OFF Ⓛ	RF Y	RF LUMINANCE SIGNAL
P. FAIL	POWER FAILURE DETECT	RF. Y. IN	RF LUMINANCE SIGNAL INPUT
P. OFF [H]	POWER OFF Ⓗ	RF. Y. OUT	RF LUMINANCE SIGNAL OUTPUT

ROTAR. SW	ROTARY SW	T. BUSCLK	TIMER BUS CLOCK
ROTARY	ROTARY SW	T. BUSLSN	TIMER BUS LISTEN
RST	RESET	T. BUSTLK	TIMER BUS TALK
RST [L]	RESET Ⓛ	T. END [L]	TAPE END Ⓛ
Rch/INST	Rch/INSERT	T. PHOTO	TAKE-UP PHOTO TRANSISTOR
S IN	SERIAL DATA INPUT	TAPE END [L]	TAPE END Ⓛ
S OUT	SERIAL DATA OUTPUT	TAPE END [L]/CAM	TAPE END Ⓛ/CAMERA PAUSE
S-PHOTO	SUPPLY PHOTO TRANSISTOR	TEST	TEST MODE
S-RL. PLS	SUPPLY REEL PULSE	TPZ	TRAPEZOIDAL WAVE CIRCUIT
S. CLK	SERIAL CLOCK	TRIC [L]	TRICK PLAY Ⓛ
S. CLK/AV	SERIAL CLOCK/AV	TRICK [L]	TRICK PLAY Ⓛ
S. DATA	SERIAL DATA	TRK. ENV	AUDIO TRACKING ENVELOPE DETECT
S. DATA/A	SERIAL DATA / AUDIO	TU. AUDIO	TUNER AUDIO
S. PHOTO	SUPPLY PHOTO TRANSISTOR	TU. GND	TUNER GND
S.TAB [L]	SAFETY TAB SW ON Ⓛ	TU. V. IN	TUNER VIDEO SIGNAL INPUT
S/P/N	SECAM/PAL/NTSC	TU. VIDEO	TUNER VIDEO
SC IN	SERIAL CLOCK INPUT	TUN NOR IN	TUNER NORMAL INPUT
SC OUT	SERIAL CLOCK OUTPUT	TUN R	TUNER AUDIO (R)
SCK SELECT	SERIAL CLOCK SELECT	TUN. AUDIO IN	TUNER AUDIO INPUT
SEL OUT [L]	SELECT OUTPUT (L)	TUNER 12V	TUNER 12V
SEL OUT [R]	SELECT OUTPUT (R)	TUNER L	TUNER AUDIO (L)
SHUTTLE 1	SHUTTLE 1	TUNER V IN	TUNER VIDEO SIGNAL INPUT
SIF	SOUND INTERMEDIATE FREQUENCY	TUNER [L]	TUNER AUDIO (L)
SLMUT [H]	INPUT SELECT MUTE Ⓗ	TUNER [N]	TUNER AUDIO (NORMAL)
SLNID [+]	SOLENOID (+)	TUNER [R]	TUNER AUDIO (R)
SLNID [–]	SOLENOID (–)	TUNER. 12	TUNER 12V
SLW TR. MM	SLOW TRACKING MONO MULTI	TUOFF [H]	TUNER OFF Ⓗ
SLW TR. REF	SLOW TRACKING REFERENCE VOLTAGE	TV. AUDIO	TV AUDIO
		TV/VTR	TV/VTR
SNS. GND	SENSOR GND	TXTON [L]	TEXT ON Ⓛ
SOFT [H]	SOFT TAPE PLAY Ⓗ	U. REG45V	UNREGULATOR 45V
SOFT [H]/NORMAL	SOFT TAPE PLAY Ⓗ/NORMAL Ⓗ	UNREG	UNREGULATOR
SOLENOID ON [L]	SOLENOID ON Ⓛ	UNREG 19V	UNREGULATOR 19V
SP [H]	SP Ⓗ	V. REF	REFERENCE VOLTAGE
SP/L/SLP	SP/LP	V. EE [H]	VIDEO EE Ⓗ
SSS [L]	SLOW/STILL/STOP Ⓛ	V. EE [L]	VIDEO EE Ⓛ
STEREO LED	STEREO LED	VCO REF	REFERENCE OSCILLATOR
STEREO [H]	STEREO Ⓗ	VD. IN	VIDEO SIGNAL INPUT
STEREO [L]	STEREO Ⓛ	VD. OUT	VIDEO SIGNAL OUTPUT
STOP. PO	STOP POSITION	VIDEO EE [L]	VIDEO EE Ⓛ
STOP/5V	STOP POSITION/5V	VIDEO IN	VIDEO SIGNAL INPUT
STOP1/TAPE SEL	STOP1 POSITION/TAPE SELECT	VIDEO OUT	VIDEO SIGNAL OUTPUT
STOP1/PAL : ST	STOP 1 POSITION/PAL	VM	MOTOR VOLTAGE
STOP2. PO	STOP 2 POSITION	VM DOWN [L]	MOTOR VOLTAGE DOWN Ⓛ
STOP2 / S-TAB	STOP POSITION/SAFETY TAB SW	VSS	VERTICAL SYNC SIGNAL
STREO [H]	STEREO Ⓗ	VTR [H]	VTR Ⓗ
SUB BIAS	SUB BIAS	VTR. 12V	VTR 12V
SUB. SW	SUB SW	X IN	OSCILLATOR INPUT
SVHS CAS [L]	S-VHS CASSETTE Ⓛ	X OUT	OSCILLATOR OUTPUT
SW. 5. DET	SW 5V DETECT		
SYNC [L]	SYNC Ⓛ		
SYSCON 5V	SYSTEM CONTROL 5V		
SYSTEM	SYSTEM SW		
T-PHOTO	TAKE-UP PHOTO TRANSISTOR		
T-RL. PLS	TAKE-UP REEL PULSE		

4 INPUT/OUTPUT CHART

4.1. INPUT/OUTPUT CHART FOR IC6001

No	Terminal Name	I/O	Description	P.OFF	P.Failure	Reset/ Release
1	CODE1	I	AD input terminal for model setting.	In	In	IN
2	CODE2	I	AD input terminal for model setting.	In	In	In
3	T.S.CUREVE	I	Input terminal for "S-Curve" of Tuner AFC.	In	In	In
4	A.SEARCH(L)	I/O	AGC Gain switching signal during the Tuner searching operation. *Gain MAX. (AGC High speed) :"L". *NORMAL :"Hi-Z"	Low	Low	IN
5	SQPB/SE/VHS	I	More than 3.25V :SQPB Less than 3.25V :VHS	In	In	In
6	NORM/SERV/T2/TES	I	Factory mode/Service mode setting terminal.	In	In	In
7	S-PHOT	I	Input terminal of the Tape End sensor detection. *More than 2.6V : Black tape part. *Less than 2.4V :Trans. Tape part.	In	In	In
8	T-PHOT	I	Input terminal of the Tape Beginning sensor detection. *More than 2.6V : Black tape part. *Less than 2.4V :Trans. Tape part.	In	In	In
9	TRACKING_ENVE	I	Input terminal of the Video envelope signal.	In	In	In
10	MO/ST/SAP	I	Input terminal to detect the Current tuned audio condition. INPUT VOLTAGE / AUDIO MODE More than 3.3V / Monaural(MONO.) 1.67V - Less 3.2V / Stereo Less 1.67V / SAP	In	Low	Low
11	CURRENT.LIMIT	O	Control terminal for the Capstan current limit. (Output inpidance: MIN:1K, TYP:2.5K, MAX:4.0K)	In DA=0V	Low	In DA=0V
12	EEPROM_CS	O	Chip Select terminal for the "NAVI" data backup of EEPROM *ACTIVE : LOW	High	Low	High
13	ART.V/H/N	O	Output terminal for the Artificial V-sync. (During REC-Prog.NAVI data writing :Hi-z)	Low	Low	Low
14	REMOCON	I	Input terminal for the Remote Controller.	In	In	In
15	PICT2	O	Contron terminal for the Picture mode.	Low	Low	Low
16	NC	O	Low fix. (No Connection.)	Low	Low	Low
17	PAL_CONV(L)	O	Delay time adjustment for the 1H Comb filter during the NTSC into PAL conversion. *"EE" Mode : "High" * "VV" Mode : Depends on the D6 & D15 of the Video IIC data and the TRICK terminal.	Low	Low	Low
18	VIDEO.H.SW	O	Video head switching signal *L'/R:"High" *R'/L:"Low"	Low	Low	Low
19	AUDIO.H.SW	O	Head switching signal for Audio circuit.	Low	Low	Low
20	D.A.REC(H)	O	Recording control signal for the Linear Audio.	Low	Low	Low
21	PICT1	O	Control terminal for the Picture mode.	Low	Low	Low
22	JOGA	I	JOG Control terminal (JOGA)	In	Low	Low
23	JOGB	I	JOG Control terminal (JOGB)	In	Low	In
24	D.FM.REC	O	Control terminal for FM Audio IC	Low	Low	Low
25	SP(L)	O	REC MODE DATA *N2H/P3H:"Low" *N4H/N6H/P6H/N10H:"High"	Low	Low	Low
26	STAB(L)	I	SAFETY TAB DETECTION *With SAFETY TAB: "Low" *Without SAFETY TAB:"High"	In	In	In
27	SHUTTLE1	I	SHUTTLE Input terminal1	Low	Low	Low
28	SHUTTLE2	I	SHUTTLE Input terminal2	Low	Low	Low
29	SHUTTLE3	I	SHUTTLE Input terminal3	Low	Low	Low
30	SHUTTLE4	I	SHUTTLE Input terminal4	Low	Low	Low
31	POS.SW3	I	Input terminal for the Mechanism position.	In	In	In
32	POS.SW2	I		In	In	In
33	POS.SW1	I		In	In	In
34	RESET	I	RESET Terminal.	In	In	In
35	32KHz.IN	I	Sub clock (32.768KHz) input terminal	In	In	In
36	32KHz.OUT	O	Sub clock (32.768KHz) output terminal	Out	Out	Out
37	5V(D)	-	VCC (5V) for Digital port	-	-	-
38	12MHz.IN	I	Main clock (12/16MHz) input terminal	In	In	In
39	12MHz.OUT	O	Main clock (12/16MHz) output terminal	Out	Out	Out
40	GND(OSC)	-	GND for OSC circuit.	-	-	-
41	CH_H/L	O	RF ch = 3 : Hi-z RF ch = 4 : Low	Low	Low	Low
42	VCR/TV	O	Control signal of TV/VTR output switch. *Shiftting the mode to the P.OFF : "LOW". *Shifting the mode from "EE" into "VV" :"High" *Whenever AC0_36H(ANT_SELECT) has comes, the condition has been reversed.	Low	Low	Low
43	32K.START(L)	I	Clock souce selection terminal during reset start. *12/16MHz(High speed) :Connect to VCC (5V) Control signal of TV/VTR output switch. *32KHz(Slow speed) :Connect to 0V.	In	In	In
44	LC.OSC.IN	I	Input terminal of the LC Oscillation	In	In	In
45	LC.OSC.OUT	O	Output terminal of the LC Oscillation	Out	Out	Out
46	GND	-	Connect to the GND	-	-	-
47	FSC.LPF	I	OSC Filter connection terminal for Internal sync generator.	In	Low	In
48	FSC.IN	I	Sub carrier (fsc) input terminal for sync generator.	In	Low	In
49	GND(OSD)	-	GND terminal for OSD circuit.	-	-	-
50	CVIN	I	Input terminal for composite video signal.	In	In	In

POSITION	C_EJECT	F_EJECT	REV	MID	PLAY	STOP	FF/REW	Others
SW3	L	H	L	H	L	H	L	H
SW2	L	L	H	H	L	L	H	H
SW1	L	L	L	L	H	H	H	H

(To be continued to the next page.)

No	Terminal Name	I/O	Description	P.OFF	P.Failure	Reset/ Release
51	ABS_NORMAL	I	This terminal has two purposes. 1.Compulsory Normal Audio selection. 2.Trigger for Audio auto Adjustment. *Compulsory Normal Audio sel.:"Low" level. (ADUBPS/HiFi_Audio envelope being low.) *Other than above : "High" level. (Auto Adjustment trigger input in details: Refer to Audio IIC spec. chart.)	In	In	In
52	CVOUT	O	Output terminal for the composite video signal.	Out	Out	Out
53	5V(OSD)	-	Power supply terminal for OSD	-	-	-
54	HLF	I	LPF connection terminal for slicer.	In	In	In
55	VHOLD	I	Capacitor connection terminal of the Reference voltage generator circuit.	In	In	In
56	CVIN(EDS)	I	Composite video signal input terminal for the slicer.	In	In	In
57	GND	-	Connect to the GND	-	-	-
58	PAL9H(H)	O	"PAL9H" Mode : "High"	Low	Low	Low
59	NC	O	Low fix. (No Connection.)			
60	FM_MUTE	O	Audio mute output terminal. *P.OFF/Head Cleaning/Timer Standby/VPS/PDC Standby: "High". (When lereasing above mode, it will be "Low" after 600m. sec.) *Other than X1 tape speed CUE/REV/SLOW/STILL) in VV mode:"High". (When the tape speed becomes X1, it will be "Low" after 600m.sec.) *EE/VV switching: When the mode change EE/VV, it will be "Low" after 600m.sec.	High	IN	IN
61	A_MUTE	O	Audio mute control terminal for normal audio.	High	IN	IN
62	NC	O	Low fix. (No Connection.)	Low	Low	Low
63	VBI2	O	During NAVI data writing: NAVI data mask pulse exists. Other than above condition:Hi-z	Low	Low	Low
64	VBI1	O	During NAVI data writing: NAVI data writing pulse exists. Other than above condition:Hi-z	Low	Low	Low
65	FLD_CS	O	Chip select signal for FIP driver. *Active: "Low" *Non-active: "High"	(Normal ope.)	Low	High
66	UNLOADING(H)	O	Control terminal for the Unloading operation.	Low	Low	Low
67	LOADING(H)	O	Control terminal for the loading operation.	Low	Low	Low
68	IC.DATA.OUT	O	Timer-Bus signal for IC control:Data output	(Normal ope.)	In	Hi-Z
69	IC.DATA.IN	I	Timer-Bus signal for IC control:Data input	(Normal ope.)	In	In
70	IC.DATA.CLK	O	Timer-Bus signal for IC control:Clock outout	(Normal ope.)	In	Hi-Z
71	IIC.CLK	O	Serial communication terminal (IIC) for AV1 chip/FM audio IC.	(Normal ope.)	In	Hi-Z
72	IIC.DATA	I/O	Serial communication terminal (IIC) for AV1 chip/FM audio IC.	(Normal ope.)	In	Hi-Z
73	125Hz/ROM.CORE	O	ROM Correction confirmation mode: *When the setting bit is "ON", "High" is existed. *When the setting bit is "OFF", "Low" is existed. (Other than ROM Correction confirmation mode, this terminal is the output terminal of internal clock for main clock adjustment.:Outputting the 125Hz.)	(Normal ope.)	Low	(Normal ope.)
74	CAP R/F	O	The rotation direction control terminal of the capstan driver. *RVS="High" *FWD="Low".	Low	Low	Low
75	HALF.WAVE.(H)	I/O	Driving method control terminal of the capstan motor: *Half-wave : "High" *Full-wave:"Hi-z"	Hi-Z	Hi-Z	Hi-Z
76	CAP.ET	O	Power supply terminal of the capstan motor control: (Conpared with the driver reference voltage, when it is "low", current will be cut. Also when it is "high", the rotation speed will be acceleted.)	High PWM=0V	Low	High PWM=0V
77	CYL.ET	O	Power supply terminal of the cylinder motor control: (Conpared with the driver reference voltage, when it is "high", current will be cut. Also when it is "low", the rotation speed will be acceleted. (Max:2.8V))	Low PWM=2.800V	Low	Low PWM=2.800V
78	P.FAIL(L)	I	Input terminal for the power failar detection. Power failar : "Low".	In	In	In
79	S.REEL.PULSE	I	Input terminal of the S.Reel pulse.	In	In	In
80	T.REEL.PULSE	I	Input terminal of the T.Reel pulse.	In	In	In
81	NTSC(L)	I/O	PLAYBACK MODE.....50Hz:"High" 60Hz:"Low"	Low	Low	Low
82	NC	O	Low fix. (No Connection.)	Low	Low	Low
83	P.OFF(H)	O	ON/OFF control terminal for the VCR Power. Power_OFF : "High"	High	Low	Low
84	AVR(L)	I/O	Refer to the Simple AI playback specification:	Low	Low	Low
85	GND	I	Connect to the GND.	In	In	In
86	FG.AMP.OUT	O	Output terminal for the Capstan FG AMP signal.	Out	Out	Out
87	FG.AMP.IN	I	Input terminal for the Capstan FG AMP signal.	In	In	In
88	GND(A)	-	GND for Analogue circuit.	-	-	-
89	KILLER	I	1.When the SYSTEM-SW is AUTO position in EE mode: * Video "PAL-M/NTSC" destinction result is OK: "LOW" is existed. * Video "PAL-M/NTSC" destinction result is NG: "HIGH" is existed. 2.When the SYSTEM-SW is AUTO position in VV mode: * Video "PAL-M/NTSC" destinction result is OK: "LOW" is existed. * Video "PAL-M/NTSC" destinction result is NG: "HIGH" is existed. NOTE:Reading is performed only a time (20m.sec).	In	In	In
90	CYL.PFG	I	Input terminal for the Cylinder PG/FG.	In	In	In
91	OREF	O	1/2 VDD reference voltage output terminalfor the Analogue AMP.	Out	Out	Out
92	IREF	I	1/2 VDD reference voltage input terminalfor the Analogue AMP.	In	In	In
93	GND	I	GND	In	In	In
94	CTL.HEAD(-)	I/O	I/O terminal for the Control head (-)	In/Out	In/Out	In/Out
95	CTL.HEAD(+)	I/O	I/O terminal for the Control head (+)	In/Out	In/Out	In/Out
96	CTL.AMP.REF	I	Capacitor connection terminal for reference of the control AMP.	In	In	In
97	PB.CTL.OUT	O	Output terminal for the Control AMP.	Out	Out	Out
98	5V(A)	-	Power supply terminal for Analogue AMP.	-	-	-
99	5V(AD)	-	Reference power supply terminal for the AD/8bit DA	-	-	-
100	BIAS(L)	O	The timing termianl for the rinear audio recording. *When recording the linear audio, the "High" is existed syncronising with D.REC(H) signal. Output mode: REC(ADUB/AV-INSERT) *When the recording starts, the BIAS (H) is existed 140-160m.sec later, after D.REC (H) being existed. *When the recording stops, the BIAS (L) is existed in 0-20m.sec later, after D.REC (L) being existed.	IN	IN	IN

SYSTEM CONTROL & SERVO / TIMER SECTION BLOCK DIAGRAM

:MAIN SIGNAL PATH IN REC MODE :MAIN SIGNAL PATH IN PLAYBACK MODE :CAPSTAIN SERVO SPEED LOOP :CAPSTAIN SERVO PHASE LOOP :CYLINDER SERVO SPEED LOOP :CYLINDER SERVO PHASE LOOP

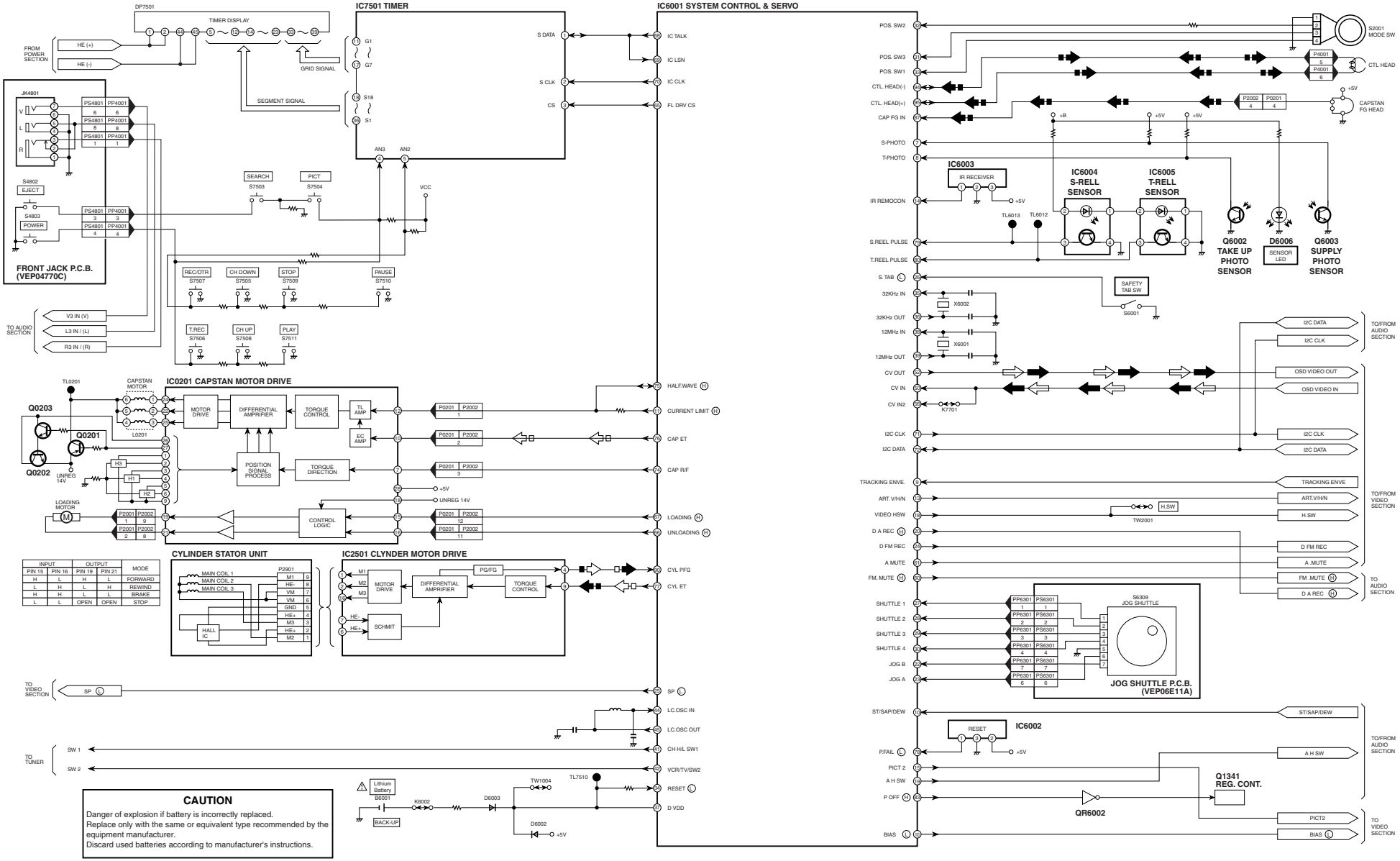

INPUT		OUTPUT		MODE
PIN 15	PIN 16	PIN 19	PIN 21	
H	L	H	L	FORWARD
L	H	L	H	REWIND
H	H	L	L	BRAKE
L	L	OPEN	OPEN	STOP

VIDEO SECTION BLOCK DIAGRAM

:AUDIO MAIN SIGNAL PATH IN REC MODE
:VIDEO MAIN SIGNAL PATH IN REC MODE
:AUDIO MAIN SIGNAL PATH IN PLAYBACK MODE
:VIDEO MAIN SIGNAL PATH IN PLAYBACK MODE

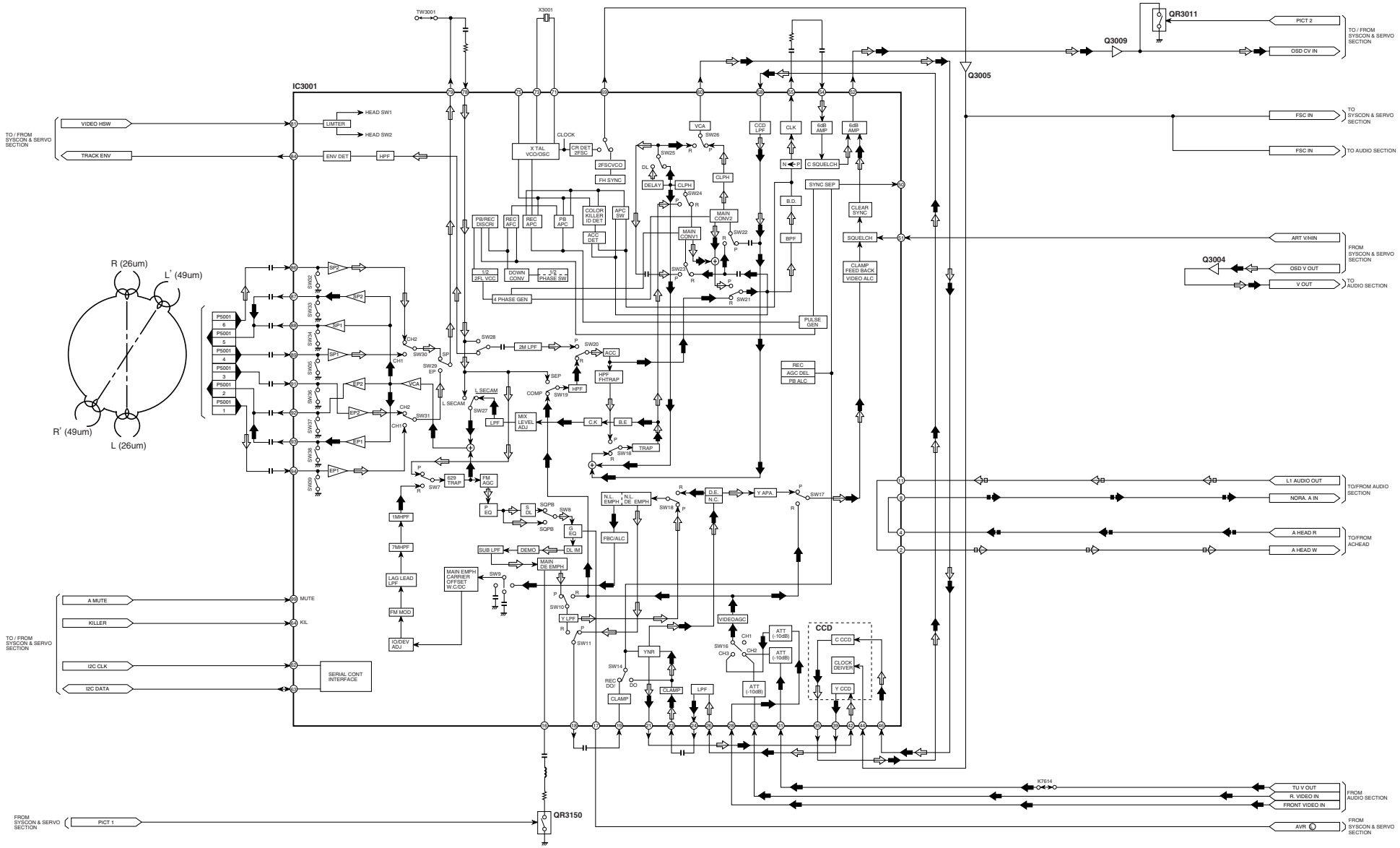

AUDIO SECTION BLOCK DIAGRAM

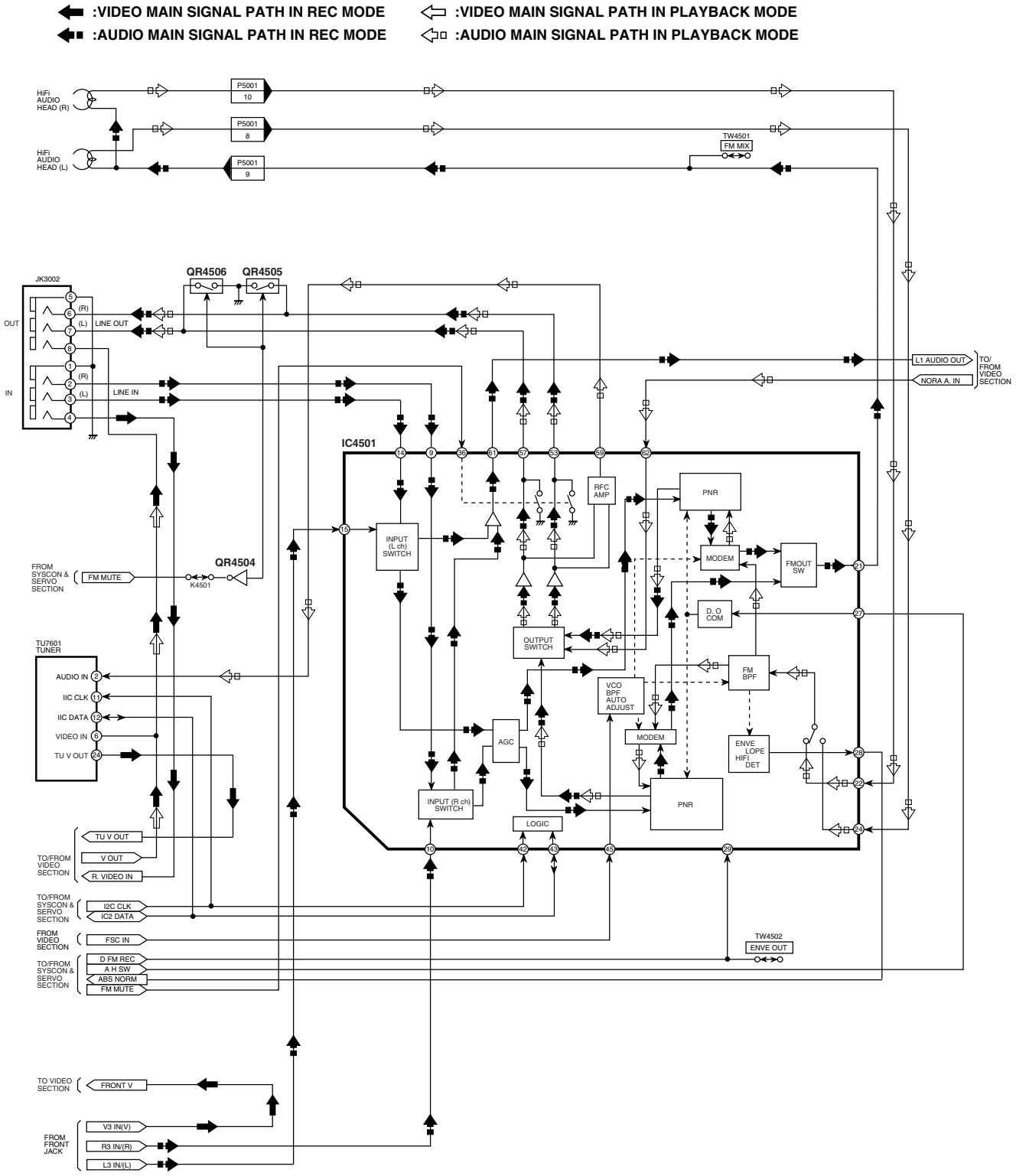

Memo

Ⓢ TO:SYSTEM CONTROL & SERVO / TIMER SECTION

CAUTION

THE ▨ MARK INDICATES THE PRIMARY CIRCUIT TO DISTINGUISH THE PRIMARY FROM THE SECONDARY CIRCUIT. PAY ATTENTION NOT TO RECEIVE AN ELECTRIC SHOCK DURING REPAIR AND SERVICE OF THE PRODUCTS.

HOT

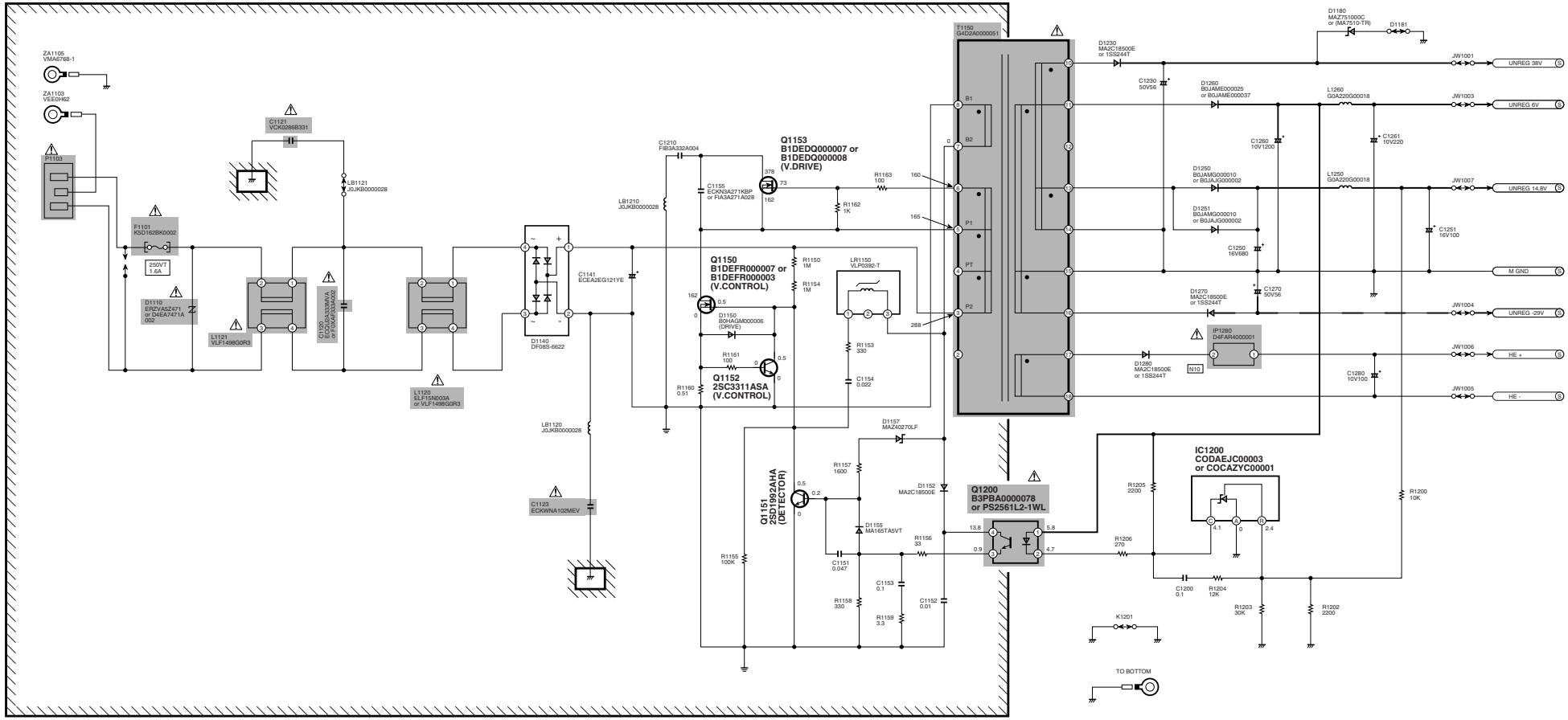

NOTE : THE MEASUREMENT MODE OF THE DC VOLTAGE ON THIS DIAGRAM IS STOP MODE.

IMPORTANT SAFETY NOTICE:
COMPONENTS IDENTIFIED WITH THE MARK ⚠ HAVE THE SPECIAL CHARACTERISTICS FOR SAFETY. WHEN REPLACING ANY OF THESE COMPONENTS USE ONLY THE SAME TYPE.

NOTE : DO NOT USE ANY PARTS NUMBER SHOWN ON THIS SCHEMATIC DIAGRAM FOR ORDERING.
WHEN YOU ORDER A PART, PLEASE REFER TO PARTS LIST.

NOTE1: WHEN MEASURE THE VOLTAGE OR WAVEFORM ON THE POWER TRANSFORMER CIRCUIT,SET THE GND TERMINAL OF MEASURING POINT AS FOLLWS.
PRIMARY SIDE... ⏚ SECONDARY SIDE... ⏚
NOTE2:THE DC VOLTAGE INDICATED IN PRIMARY SIDE IS SHOWN THE VOLTAGE WHEN INPUT AC IS 220V.

COMPONENT NAME	POWER SECTION	01/01
CIRCUIT BOARD NO.		DRAWING NO.
VEP06E21E		SCM001

:VIDEO MAIN SIGNAL PATH IN PLAYBACK MODE
:VIDEO MAIN SIGNAL PATH IN REC MODE
:CAPSTAN SERVO PHASE LOOP
:CAPSTAN SERVO SPEED LOOP
:CYLINDER SERVO SPEED LOOP
:CYLINDER SERVO PHASE LOOP

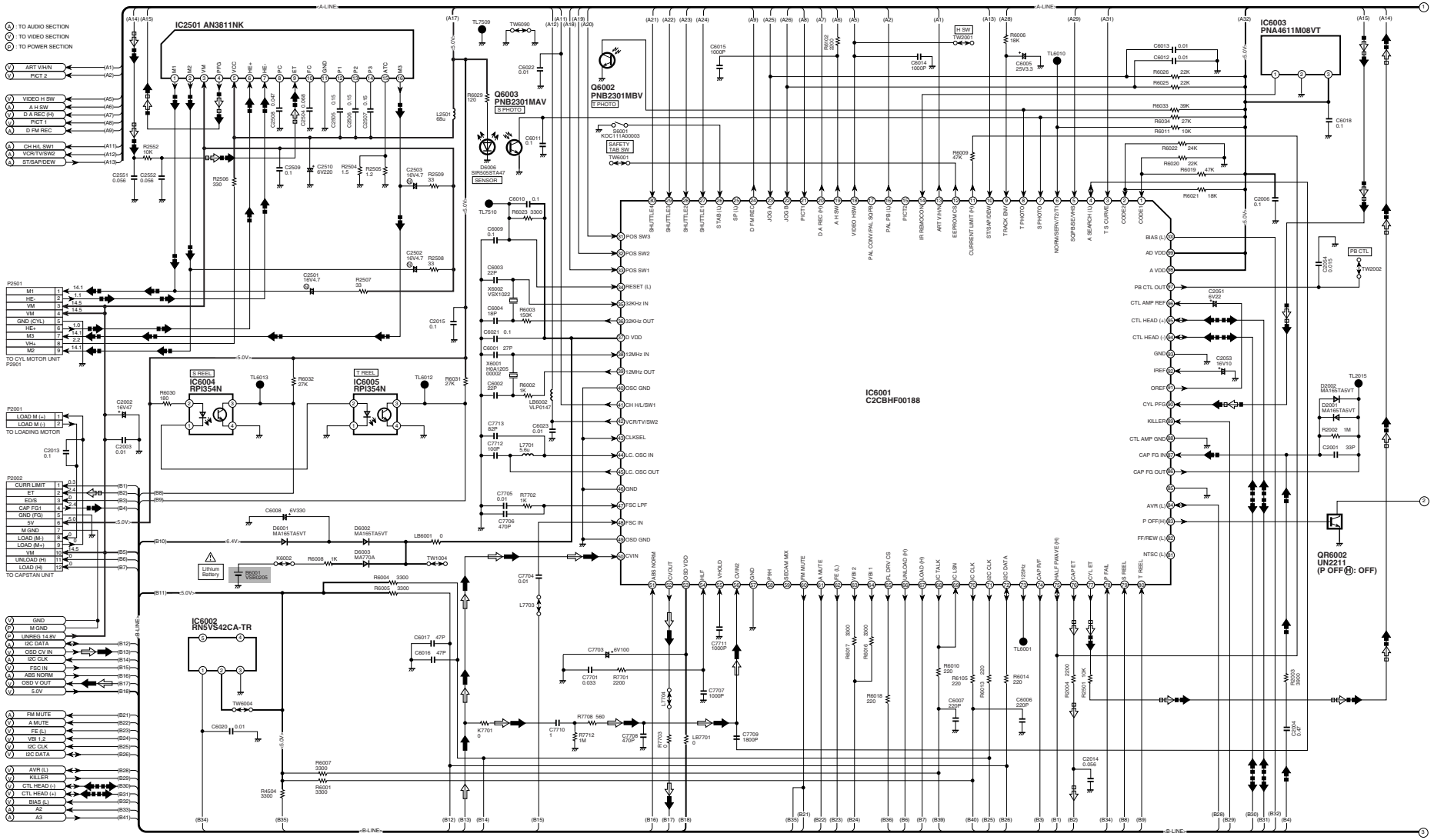

NOTE : DO NOT USE ANY PARTS NUMBER SHOWN ON THIS SCHEMATIC DIAGRAM FOR ORDERING.
WHEN YOU ORDER A PART, PLEASE REFER TO PARTS LIST.

CAUTION
Danger of explosion if battery is incorrectly replaced.
Replace only with the same or equivalent type recommended by the equipment manufacturer.
Discard used batteries according to manufacturer's instructions.

COMPONENT NAME	SYSCON & SERVO/TIMER SECTION	01/02
CIRCUIT BOARD NO.		DRAWING NO.
VEP06E21E		SCM002

:GRID CONTROL SIGNAL PATH
:SEGMENT CONTROL SIGNAL PATH

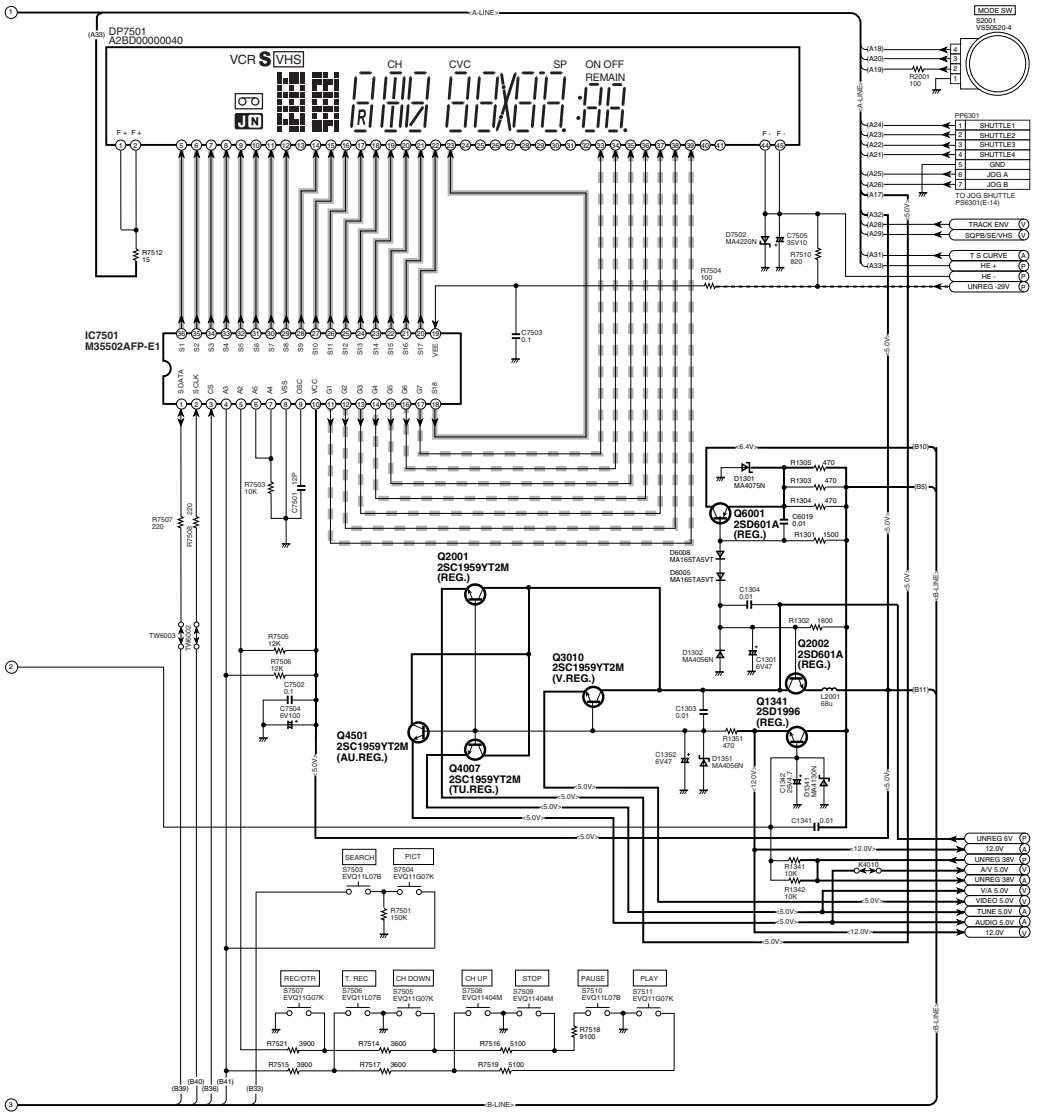

IMPORTANT SAFETY NOTICE:
COMPONENTS IDENTIFIED WITH THE MARK ⚠ HAVE THE SPECIAL CHARACTERISTICS FOR SAFETY.
WHEN REPLACING ANY OF THESE COMPONENTS USE ONLY THE SAME TYPE.

SYSTEM CONTROL & SERVO ICs VOLTAGE CHART (SP MODE)

Ref.No.	IC2501																			
MODE	1	2	3	4	5	6	7	8	9	10	11	12	13	14	15	16				
STOP	14.4	14.4	14.7	1.1	5.0	1.0	1.0	0.5	2.3	1.3	0	3.8	3.8	3.9	0	14.4				
PLAY	14.3	14.3	14.6	1.1	5.0	1.0	1.0	0.4	2.3	1.3	0	3.8	3.8	3.8	0	14.3				
REC	14.3	14.3	14.6	0.8	5.0	1.0	1.0	0.4	2.3	1.3	0	3.8	3.8	3.8	0	14.3				
F.F	14.1	14.1	14.5	0.8	5.0	1.0	1.1	0.4	2.4	1.3	0	3.8	3.8	36.8	0	14.2				
REW	14.1	14.1	14.5	1.1	5.0	1.0	1.1	0.5	2.3	1.3	0	3.8	3.8	3.8	0	14.0				
Ref.No.	IC6001																			
MODE	1	2	3	4	5	6	7	8	9	10	11	12	13	14	15	16	17	18	19	20
STOP	0.8	0	2.4	0	0	4.9	4.8	4.7	1.0	0	0	4.9	0	4.9	4.8	0	4.8	-	0	0
PLAY	0.8	0	2.3	0.3	0	4.9	4.7	4.7	1.6	0	4.6	4.9	0	4.9	4.8	0	4.8	-	-	0
REC	0.8	0	2.3	0.3	0	4.9	4.8	4.6	0	0	4.6	4.8	0	4.9	4.8	0	4.8	-	0	4.7
F.F	0.8	0	2.3	0.3	0	4.9	4.7	4.5	0.8	0	4.8	4.9	0	4.9	4.7	0	4.8	-	0	0
REW	0.8	0	2.3	0.4	0	4.9	4.6	4.5	3.5	0	4.8	4.9	0	4.9	4.8	0	4.8	-	0	0
Ref.No.	IC6001																			
MODE	21	22	23	24	25	26	27	28	29	30	31	32	33	34	35	36	37	38	39	40
STOP	0	0	0	0	4.8	0	0	0	0	0	4.8	0	0	0	1.5	1.5	4.8	-	-	0
PLAY	0	0	0	0	0	0	0	0	0	0	4.8	0	0	4.8	1.5	1.5	4.8	-	-	0
REC	0	0	0	4.7	4.8	0	0	0	0	0	4.8	0	0	4.8	1.5	1.5	4.8	-	-	0
F.F	0	0	0	0	0	0	0	0	0	0	4.8	4.8	0	4.8	1.5	1.5	4.8	-	-	0
REW	0	0	0	0	4.8	0	0	0	0	0	4.8	4.9	0	4.9	1.6	1.6	4.9	-	-	0
Ref.No.	IC6001																			
MODE	41	42	43	44	45	46	47	48	49	50	51	52	53	54	55	56	57	58	59	60
STOP	4.8	0	0	4.4	4.4	0	1.3	2.1	0	2.2	4.2	2.2	5.0	2.1	1.5	1.9	0	0	0	0
PLAY	4.8	4.8	0	4.6	4.6	0	1.3	2.0	0	2.2	4.2	2.2	5.0	2.1	1.5	1.9	0	0	0	0
REC	4.8	4.8	0	0	0	0	1.3	2.0	0	2.2	4.2	2.2	5.0	2.1	1.5	1.9	0	0	0	0
F.F	4.9	0	0	2.9	2.9	0	1.3	2.1	0	2.2	4.2	2.2	5.0	2.0	1.5	1.9	0	0	0	0
REW	4.8	0	0	2.9	2.9	0	1.3	2.1	0	2.2	4.2	2.2	5.0	2.0	1.4	1.9	0	0	0	0
Ref.No.	IC6001																			
MODE	61	62	63	64	65	66	67	68	69	70	71	72	73	74	75	76	77	78	79	80
STOP	0	0	0	0	2.5	0	0	3.5	3.5	3.7	3.7	3.5	2.4	0	0	0	2.3	4.9	0.1	5.0
PLAY	0	0	0	0	2.7	0	0	3.4	3.4	3.7	3.7	3.5	2.4	0	0.3	2.4	2.3	4.9	5.0	5.0
REC	0	0	0	0	2.5	0	0	4.1	3.6	3.7	3.6	3.5	2.4	0	0.3	2.4	2.3	4.9	5.0	5.0
F.F	0	0	0	0	3.7	0	0	4.1	3.9	4.0	3.7	3.6	2.5	0	4.5	4.8	2.3	5.0	2.3	2.3
REW	0	0	0	0	3.7	0	0	3.7	3.7	3.8	3.6	2.5	4.8	4.5	4.8	2.3	5.0	2.2	2.7	5.0
Ref.No.	IC6001																			
MODE	81	82	83	84	85	86	87	88	89	90	91	92	93	94	95	96	97	98	99	100
STOP	0	0	0	4.1	0	2.4	2.4	0	0	1.1	2.4	2.4	0	2.4	2.4	2.4	2.4	4.9	4.9	4.8
PLAY	0	0	0	4.1	0	2.4	2.4	0	0	1.1	2.4	2.4	0	2.4	2.4	2.4	2.3	4.9	4.9	4.8
REC	0	0	0	4.1	0	2.4	2.4	0	0	0.8	2.4	2.4	0	2.9	2.1	2.4	2.4	4.9	4.9	0
F.F	0	0	0	4.2	0	2.5	2.5	0	0	1.1	2.5	2.5	0	2.4	2.4	2.4	2.4	5.0	5.0	4.9
REW	0	0	0	4.2	0	2.5	2.5	0	0	0.8	2.5	2.5	0	2.4	2.4	2.4	2.5	5.0	5.0	4.9
Ref.No.	IC6002					IC6003					IC6004					IC6005				
MODE	1	2	3	4	5	1	2	3			1	2	3	4		1	2	3	4	
STOP	4.9	4.9	0	0	0	4.9	0	4.9			1.1	2.2	5.0	0		0	1.1	5.0	0	
PLAY	4.9	4.9	0	0	0	4.9	0	4.9			1.1	2.2	5.0	0		0	1.1	5.0	0	
REC	4.9	4.9	0	0	0	4.9	0	4.9			1.1	2.2	5.0	0		0	1.1	5.0	0	
F.F	5.0	5.0	0	0	0	4.9	0	4.9			1.1	2.2	2.2	0		0	1.1	2.3	0	
REW	5.0	5.0	0	0	0	4.9	0	4.9			1.1	2.2	2.3	0		0	1.1	2.3	0	
Ref.No.	IC7501																			
MODE	1	2	3	4	5	6	7	8	9	10	11	12	13	14	15	16	17	18	19	20
STOP	3.6	3.8	2.5	4.9	4.9	0	0	0	2.3	4.9	-24.7	-25.0	-25.1	-25.0	-24.9	-24.9	-24.9	-18.5	-29.8	-29.6
PLAY																				
REC																				
F.F																				
REW																				
Ref.No.	IC7501																			
MODE	21	22	23	24	25	26	27	28	29	30	31	32	33	34	35	36				
STOP	-18.5	-20.0	-14.0	-14.0	-19.0	-14.5	-14.6	-14.0	-18.6	-15.0	-15.0	-15.5	-24.4	-20.0	-10.5	-15.0				
PLAY																				
REC																				
F.F																				
REW																				

SYSTEM CONTROL & SERVO TRANSISTORs VOLTAGE CHART (SP MODE)

Ref.No.	Q1341			Q2001			Q2002			Q3010			Q4007			Q4501		
MODE	E	C	B	E	C	B	E	C	B	E	C	B	E	C	B	E	C	B
STOP	12.2	14.7	12.9	5.0	5.7	5.7	5.0	5.7	5.7	5.0	5.6	5.7	5.0	5.6	5.7	5.0	5.6	5.7
PLAY	12.3	14.7	12.9	5.0	5.9	5.8	5.0	5.9	5.7	5.0	5.8	5.8	5.0	5.8	5.7	5.0	5.8	5.8
REC	12.3	14.7	12.9	5.0	5.8	5.8	5.0	5.8	5.7	5.0	5.7	5.7	5.0	5.7	5.7	5.0	5.7	5.8
F.F	12.5	14.5	13.2	5.0	6.1	5.7	5.1	6.1	5.8	5.0	6.0	5.7	5.0	6.0	5.7	5.0	6.0	5.7
REW	12.5	14.5	13.2	5.0	6.0	5.7	5.1	6.1	5.8	5.0	6.0	5.7	5.0	6.0	5.7	5.0	5.9	5.7
Ref.No.	Q6001			Q6002			Q6003			QR6002								
MODE	E	C	B	-	+		-	+		E	C	B						
STOP	6.4	7.7	7.0	0	4.7		0	4.8		0	12.9	0						
PLAY	6.4	7.7	7.0	0	4.7		0	4.8		0	12.9	0						
REC	6.4	7.7	7.0	0	4.7		0	4.8		0	12.9	0						
F.F	6.4	7.6	7.1	0	4.7		0	4.8		0	13.2	0						
REW	6.4	7.6	7.1	0	4.7		0	4.8		0	13.2	0						

COMPONENT NAME	SYSCON & SERVO/TIMER SECTION	02/02
CIRCUIT BOARD NO.		DRAWING NO.
VEP06E21E		SCM003

◀ : VIDEO MAIN SIGNAL PATH IN REC MODE
◁ : VIDEO MAIN SIGNAL PATH IN PLAYBACK MODE
◀ : AUDIO MAIN SIGNAL PATH IN REC MODE
◁ : AUDIO MAIN SIGNAL PATH IN PLAYBACK MODE

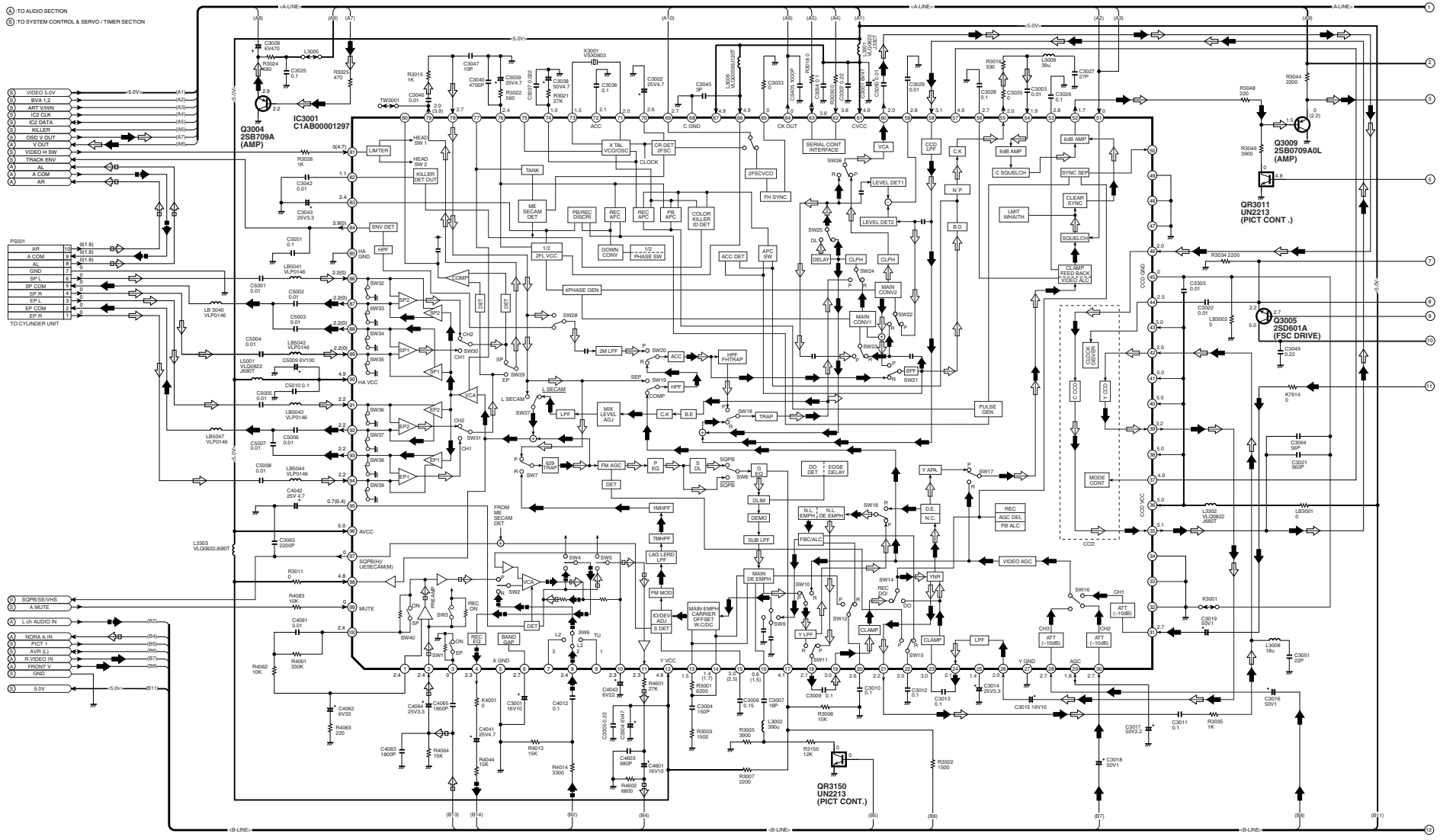

NOTE : THE MEASUREMENT MODE OF THE DC VOLTAGE IN THE BRACKETS ( ) ON THIS DIAGRAM IS RECORD MODE WITH NTSC COLOUR SIGNAL. (SP MODE)
THE MEASUREMENT MODE OF THE DC VOLTAGE OUT OF THE BRACKETS ON THIS DIAGRAM IS PLAYBACK MODE WITH NTSC COLOUR SIGNAL. (SP MODE)

NOTE : DO NOT USE ANY PARTS NUMBER SHOWN ON THIS SCHEMATIC DIAGRAM FOR ORDERING.
WHEN YOU ORDER A PART, PLEASE REFER TO PARTS LIST.

COMPONENT NAME	VIDEO SECTION	01/02
CIRCUIT BOARD NO.		DRAWING NO.
VEP06E21E		SCM004

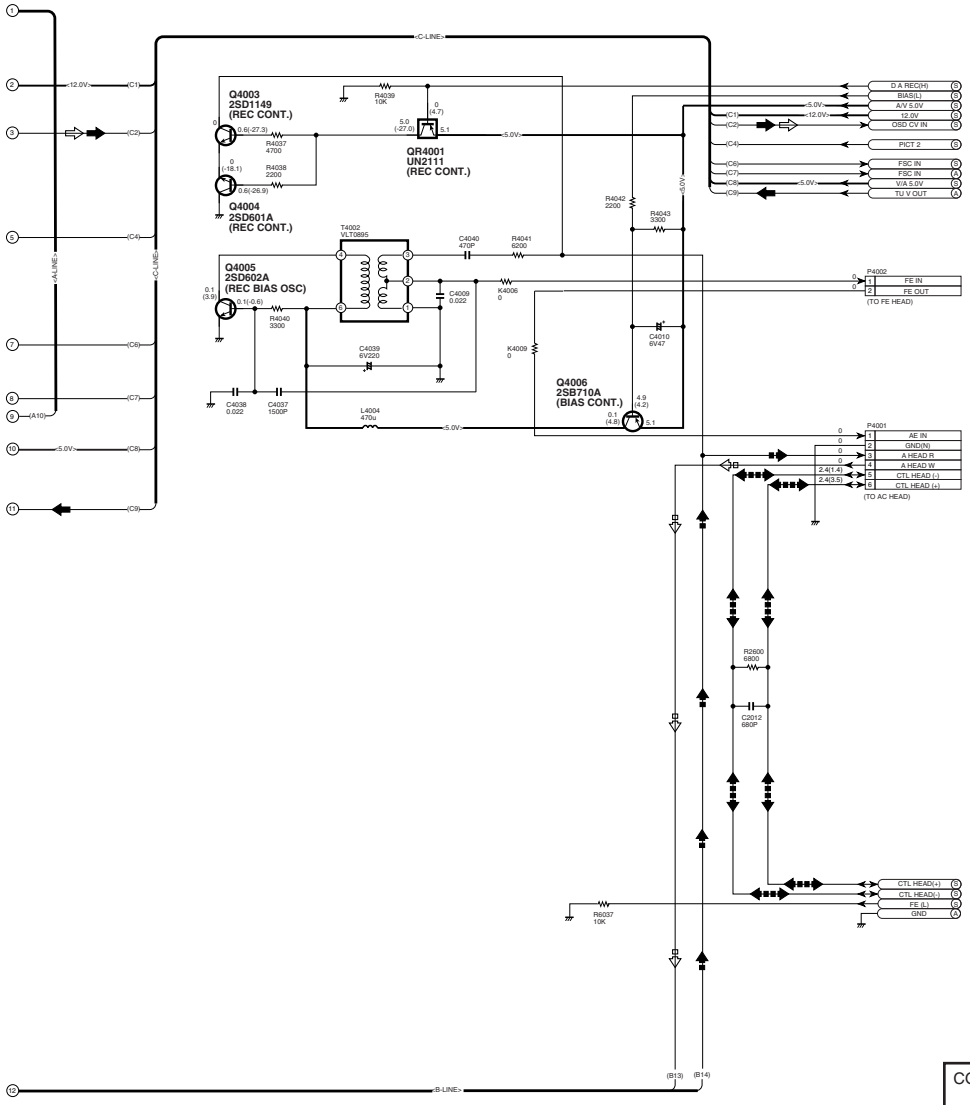

COMPONENT NAME	VIDEO SECTION	02/02
CIRCUIT BOARD NO.		DRAWING NO.
VEP06E21E		SCM005

:VIDEO MAIN SIGNAL PATH IN REC MODE
:AUDIO MAIN SIGNAL PATH IN REC MODE
:VIDEO MAIN SIGNAL PATH IN PLAYBACK MODE
:AUDIO MAIN SIGNAL PATH IN PLAYBACK MODE

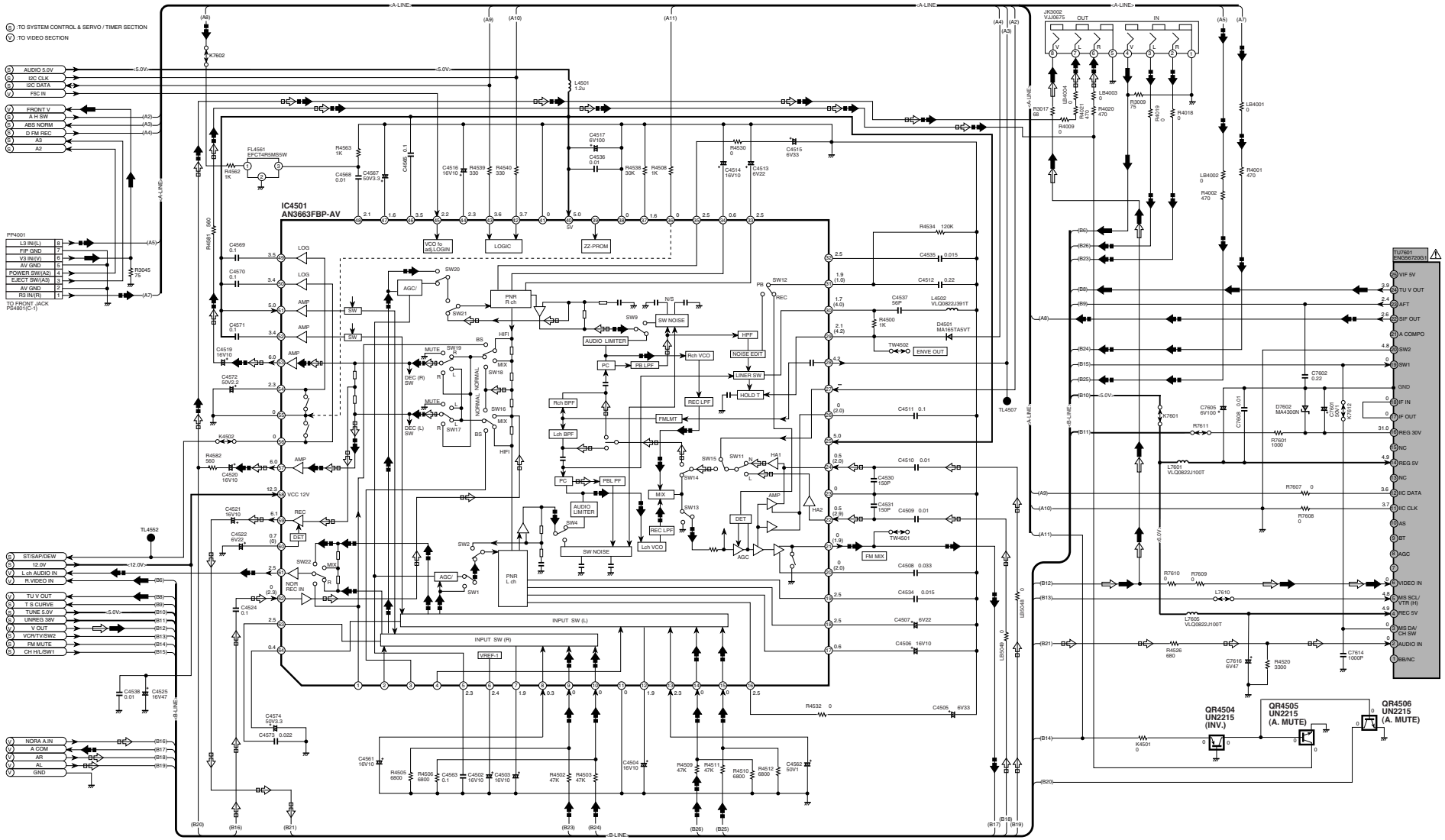

NOTE : THE MEASUREMENT MODE OF THE DC VOLTAGE IN THE BRACKETS ( ) ON THIS DIAGRAM IS RECORD MODE WITH NTSC COLOUR SIGNAL. (SP MODE) THE MEASUREMENT MODE OF THE DC VOLTAGE OUT OF THE BRACKETS ON THIS DIAGRAM IS PLAYBACK MODE WITH NTSC COLOUR SIGNAL. (SP MODE)

IMPORTANT SAFETY NOTICE:
COMPONENTS IDENTIFIED WITH THE MARK ⚠ HAVE THE SPECIAL CHARACTERISTICS FOR SAFETY.
WHEN REPLACING ANY OF THESE COMPONENTS USE ONLY THE SAME TYPE.

NOTE : DO NOT USE ANY PARTS NUMBER SHOWN ON THIS SCHEMATIC DIAGRAM FOR ORDERING.
WHEN YOU ORDER A PART, PLEASE REFER TO PARTS LIST.

COMPONENT NAME	AUDIO SECTION	01/01
CIRCUIT BOARD NO.		DRAWING NO.
VEP06E21E		SCM006

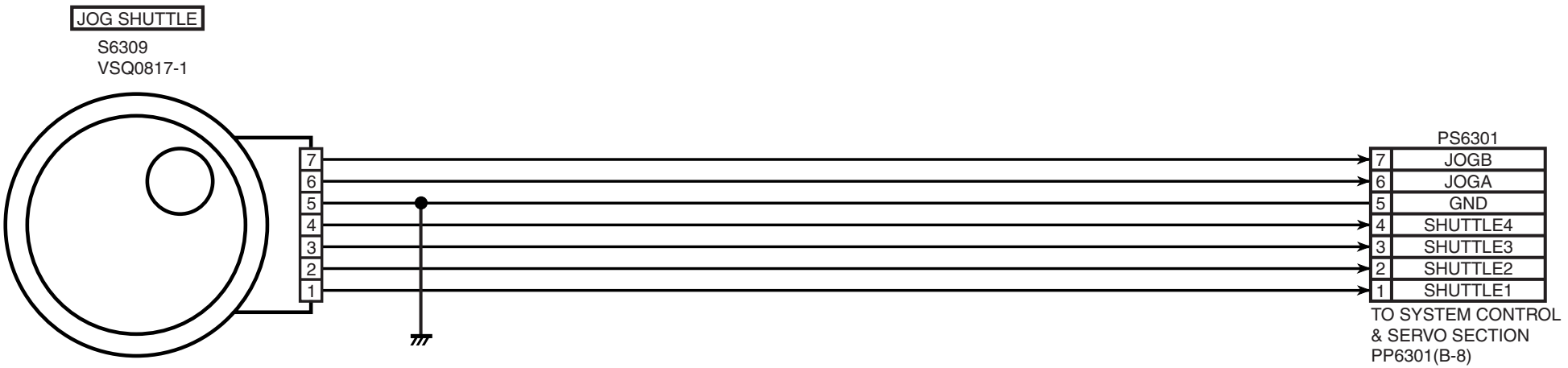

NOTE : DO NOT USE ANY PARTS NUMBER SHOWN ON THIS SCHEMATIC DIAGRAM FOR ORDERING.
WHEN YOU ORDER A PART, PLEASE REFER TO PARTS LIST.

COMPONENT NAME	JOG SHUTTLE	01/01
CIRCUIT BOARD NO.		DRAWING NO.
VEP06E11A		SCM007

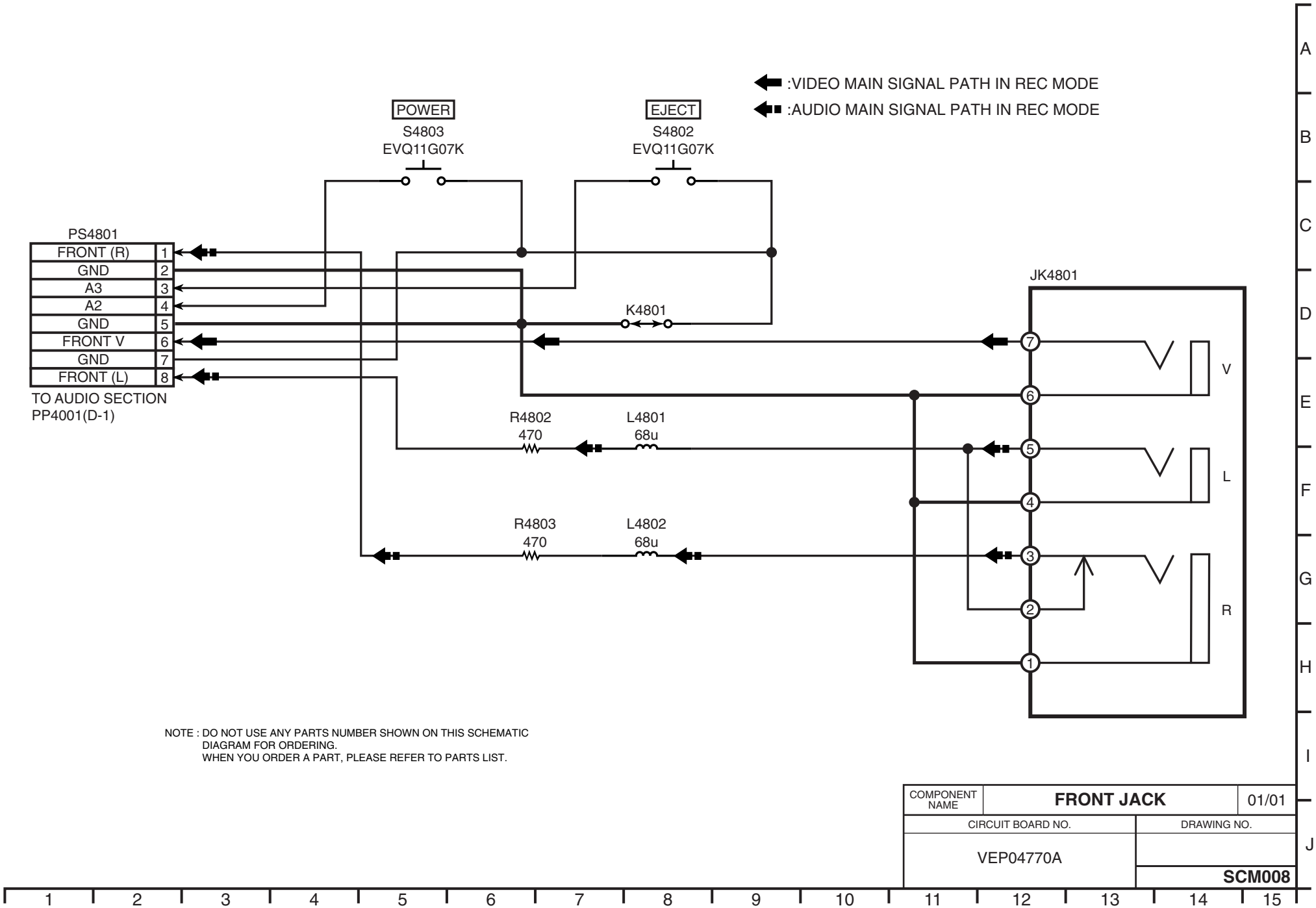

NOTE : DO NOT USE ANY PARTS NUMBER SHOWN ON THIS SCHEMATIC DIAGRAM FOR ORDERING.
WHEN YOU ORDER A PART, PLEASE REFER TO PARTS LIST.

COMPONENT NAME	FRONT JACK	01/01
CIRCUIT BOARD NO.		DRAWING NO.
VEP04770A		SCM008

MAIN P.C.BOARD (VEP06E21E)

MAIN P.C.BOARD			
Transistor		Test Land	
Q1150	B-2	TL2015	B-3
Q1151	C-2	TL4507	D-5
Q1152	C-2	TL4552	C-5
Q1153	B-2	TL6001	B-4
Q1200	B-2	TL6010	B-3
Q1341	B-5	TL6012	B-3
Q2001	B-3	TL6013	A-4
Q2002	A-3	TL7509	B-3
Q3004	D-6	TL7510	B-4
Q3005	C-4		
Q3009	C-4	PGND	D-2
Q3010	B-5		
Q4003	D-4	Test Wire	
Q4004	D-5	TW1004	B-6
Q4005	B-6	TW2001	D-4
Q4006	B-6	TW2002	D-4
Q4007	B-5	TW3001	D-5
Q4501	B-5	TW4501	D-5
Q6001	A-2	TW4502	D-5
Q6002	B-3	TW6001	B-3
Q6003	B-6	TW6002	A-4
		TW6003	A-4
Transistor & Resistor		TW6004	C-3
QR3011	C-4	TW6090	B-3
QR3150	C-4		
QR4001	B-6	Connector	
QR4504	C-6	P1103	D-2
QR4505	C-6	P2001	D-3
QR4506	C-6	P2002	B-3
QR6002	B-5	P2501	D-3
		P4001	D-4
Integrated Circuit		P4002	C-6
IC1200	A-2	P5001	D-5
IC2501	D-3	PP4001	A-6
IC3001	C-4	PP6301	A-2
IC4501	C-5		
IC6001	B-4	TU7601	D-6
IC6002	C-3		
IC6003	A-5		
IC6004	B-5		
IC6005	B-4		
IC6006	B-5		
IC7501	A-4		

ADDRESS INFORMATION

CAUTION

DANGER OF EXPLOSION IF BATTERY IS INCORRECTLY REPLACED. REPLACE ONLY WITH THE SAME OR EQUIVALENT TYPE RECOMMENDED BY THE EQUIPMENT MANUFACTURER. DISCARD USED BATTERIES ACCORDING TO MANUFACTURER'S INSTRUCTIONS.

CAUTION

THE ▨ MARK INDICATES THE PRIMARY CIRCUIT TO DISTINGUISH THE PRIMARY FROM THE SECONDARY CIRCUIT. PAY ATTENTION NOT TO RECEIVE AN ELECTRIC SHOCK DURING REPAIR AND SERVICE OF THE PRODUCTS.

IMPORTANT SAFETY NOTICE:
COMPONENTS IDENTIFIED WITH THE MARK ⚠ HAVE THE SPECIAL CHARACTERISTICS FOR SAFETY. WHEN REPLACING ANY OF THESE COMPONENTS, USE ONLY THE SAME TYPE.

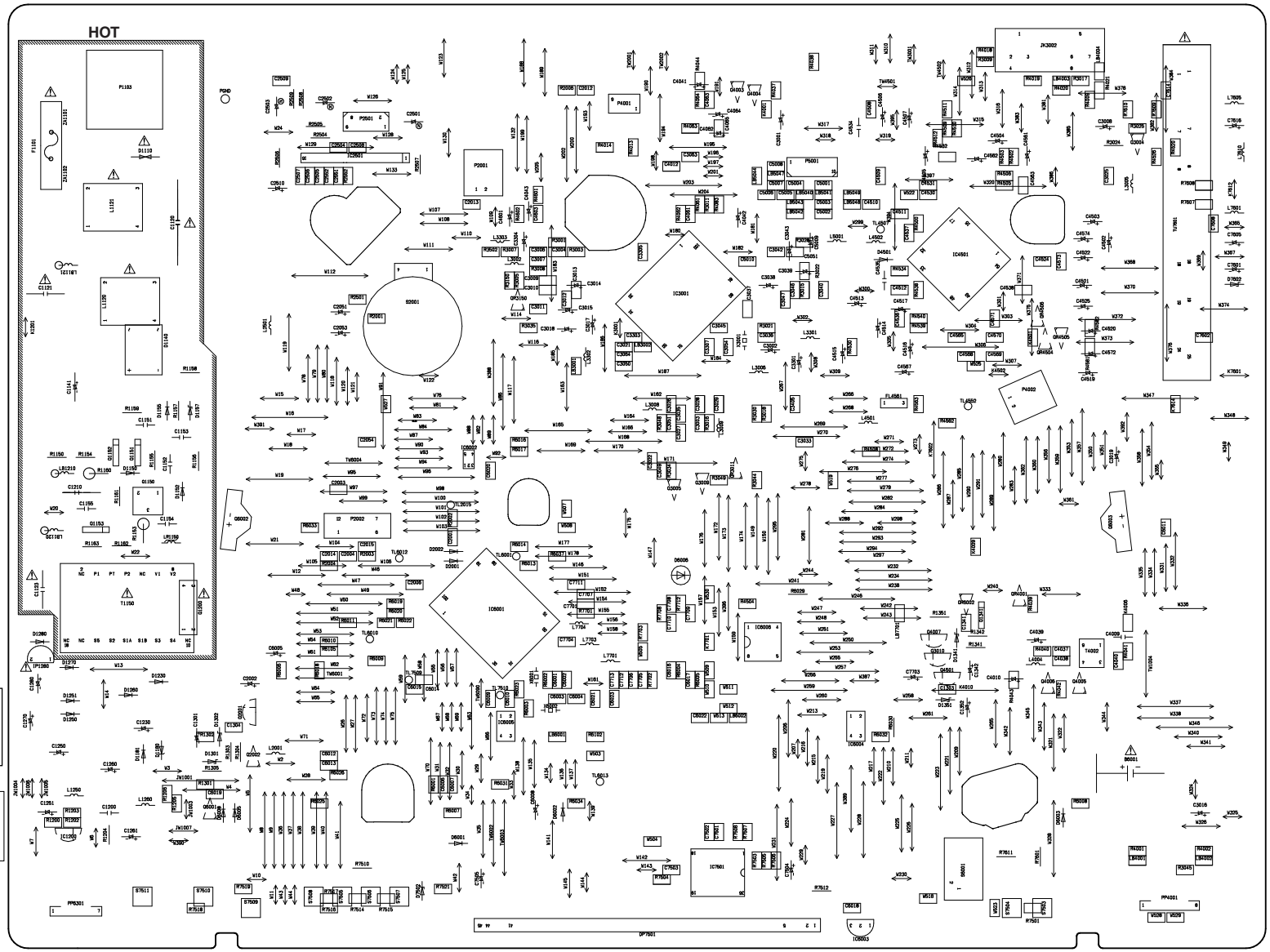

(COMPONENT SIDE)

JOG SHUTTLE P.C.BOARD (VEP06E11A)

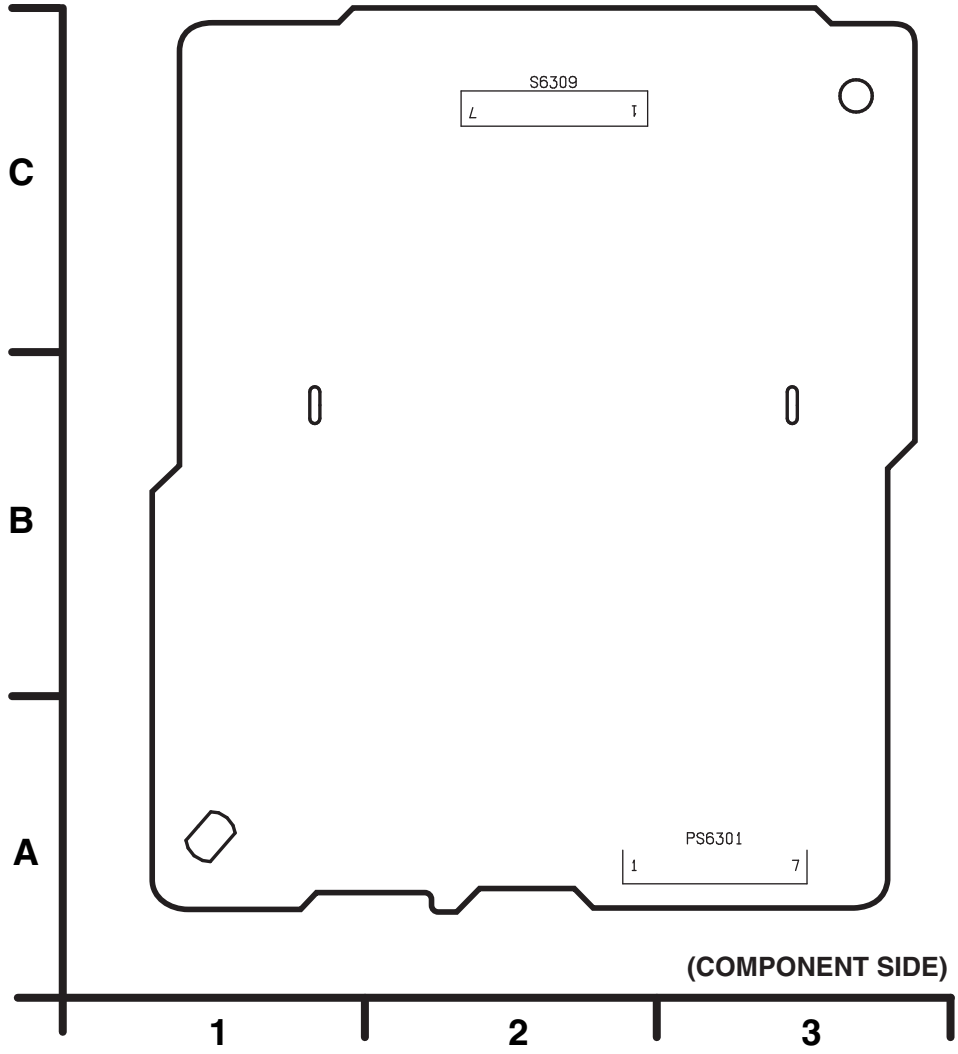

FRONT JACK P.C.BOARD (VEP04770A)

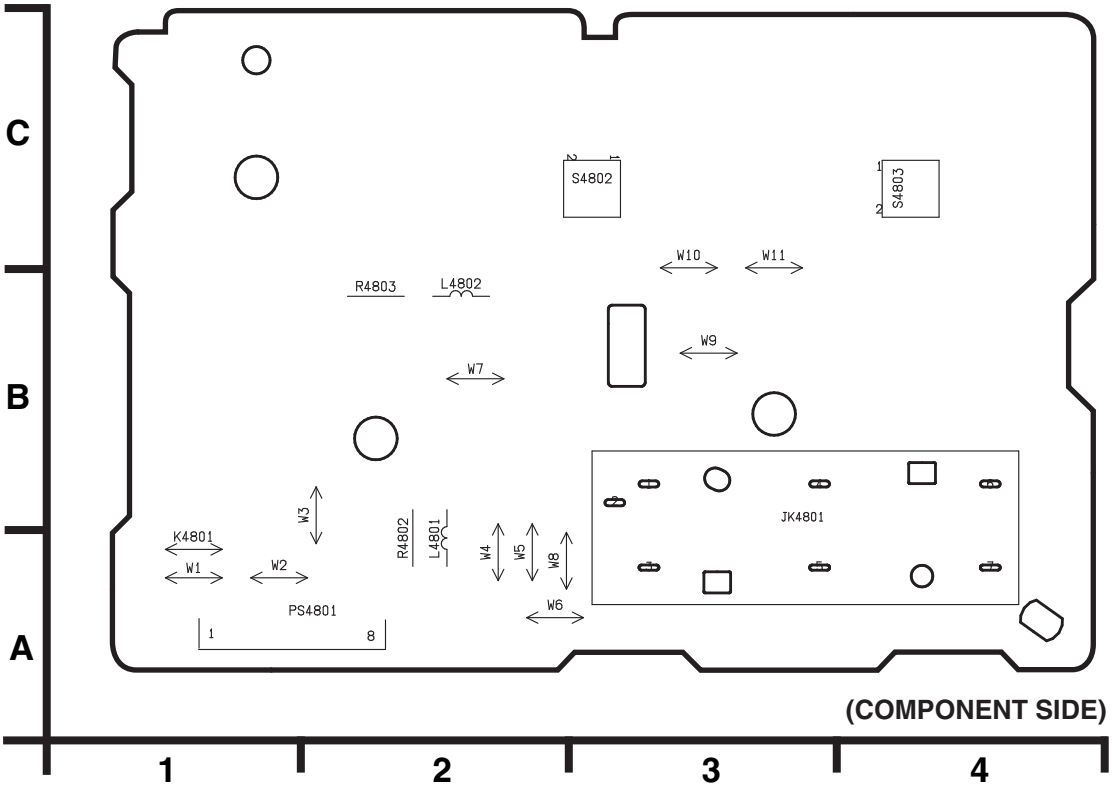

8 EXPLODED VIEWS & REPLACEMENT PARTS LIST

Note:

1. *Be sure to make your orders of replacement parts according to this list.
2. Unless otherwise specified, all resistors are in OHMS, K=1,000 OHMS, all capacitors are in MICROFARADS (μF), P=μμF.
3. The P.C. Board untils marked with "■" shown below the main assembled parts.
4. The parts marked with Ⓔon the exploded view show the electric parts.
5. IMPORTANT SAFETY NOTICE
   Components identified with the mark ⚠ have the special characteristics for safety. When replacing any of these components, use only the same type.
6. The marking (RTL) indicates the retention time is limited for this item.
   After the diacontinuation of this assembly in production, it will no longer be available.

SERVICING FIXTURES & TOOLS

Ref.No.	Part No.	Part Name & Description	Pcs	Remarks
	VFM8080HQFP	VHS ALIGNMENT TAPE	1	
	VFK0335	RETAINING RING REMOVER	1	
	VFK0329	POST ADJ. SCREWDRIVER	1	
	VFK0326	HEX WRENCH SET	1	
	VFK0132A	BACK TENSION METER	1	
	VFK27	HEAD CLEANING STICK	1	
	M0R265	MORLYTONE GREASE	1	
	VFK0330	FINE ADJ. SCREWDRIVER	1	
	VFK1301	SILICONE GREASE	1	
	VFK1298	FOIL GREASE	1	

Ref.No.	Part No.	Part Name & Description	Pcs	Remarks

CHASSIS PARTS SECTION

Components identified with the mark ⚠ have the special characterisitics for safety.
When replacing any of these components, use onlly the same type.

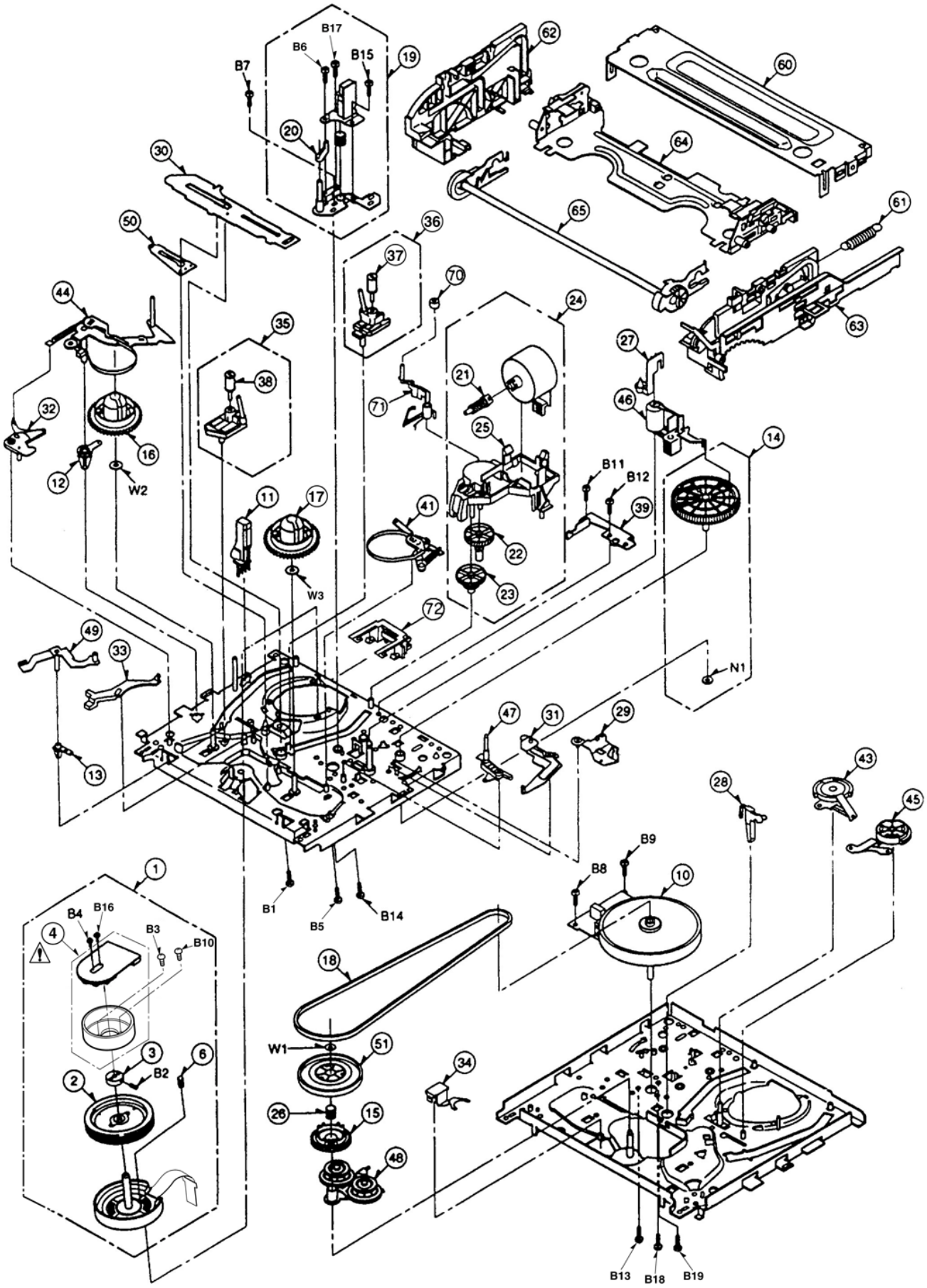

CHASSIS PARTS SECTION

Components identified with the mark ⚠ have the special characterisitics for safety.
When replacing any of these components, use onlly the same type.

Ref.No.	Part No.	Part Name & Description	Pcs	Remarks
1	VEG1539	CYLINDER UNIT	1	
2	VXP2033	UPPER CYLINDER UNIT	1	
3	VDB1256	CYLINDER RETAINER	1	
⚠ 4	VEK8840	CYLINDER MOTOR UNIT	1	
6	VXS0135	EARTH BRUSH ASS'Y	1	
10	VEK9069	CAPSTAN ASS'Y	1	
11	L1AZ00000004	FE HEAD	1	
12	VDB1431	TENSION ARM BOSS	1	
13	VDB1460	SUPPLY BRAKE ARM BOSS	1	
14	VDG1220KIT	MAIN CAM GEAR	1	
15	VDG1221	CONVERSION GEAR	1	
16,17	VDR0350	REEL TABLE	2	
18	VDV0382	CAPSTAN BELT	1	
19	VED0412	A/C HEAD ASS'Y	1	
20	VMX2656	P4 CAP	1	
21	VDG1217	WORM GEAR	1	
22	VDG1218	WORM WHEEL GEAR	1	
23	VDG1219	CENTRE GEAR	1	
24	VEM0604	LOADING MOTOR ASS'Y	1	
25	VMD2619	MOTOR BRACKET	1	
26	VMB3045	CONVERSION GEAR SPRING	1	
27	VMD2620	OPENER PIECE	1	
28	VMD2738	LED PRISM	1	
29	VML3165	DRIVE RACK ARM	1	
30	VML3166	MAIN LEVER	1	
31	VML3167	DRIVE MAIN LEVER ARM	1	
32	VML3172	SUPPLY SPRING ARM	1	
33	VML3176	CONVERSION LEVER A	1	
34	VML3177	CONVERSION LEVER B	1	
35	VXA6040	INCLINED BASE (S) ASS'Y	1	
36	VXA5854	INCLINED BASE (T) ASS'Y	1	
37,38	VXP1891	ROLLER POST ASS'Y	2	
39	VMA9672	SUPPORT ANGLE	1	
41	VXL2667	TAKE UP BRAKE ARM ASS'Y	1	
43	VXL2670	TAKE UP LOADING ARM ASS'Y	1	
44	VXL2793	TENSION ARM ASS'Y	1	
45	VXL2672	SUPPLY LOADING ARM ASS'Y	1	
46	VXL2785	PINCH ARM ASS'Y	1	
47	VXL2996	P5 ARM ASS'Y	1	
48	VXL2792	IDLER ARM ASS'Y	1	
49	VXL2733	SUPPLY BRAKE ARM ASS'Y	1	
50	VXL2747	LOADING RACK ASS'Y	1	
51	VXP2053	CENTER CLUTCH ASS'Y	1	
60	VMA9516	TOP PLATE	1	
61	VMB3047	CONNECTION SPRING	1	
62	VMD3379	SIDE PLATE (L)	1	
63	VXA6540	SIDE PLATE (R) ASS'Y	1	
64	VXA5746	CASSETTE HOLDER ASS'Y	1	
65	VXP1730	MAIN SHAFT ASS'Y	1	
70	VDP1668-K	CLEANER ROLLER	1	
71	VML3164	CLEANER ARM	1	
72	VMD3795	FPC HOLDER	1	
B1	VHD1118	SCREW	1	
B2	VHD0842	SCREW	1	
B3	VHD0843	SCREW	1	
B4	VHD0844	SCREW	1	
B5	VHD1118	SCREW	1	
B6	VHD1066	SCREW	1	
B7	VHD1044	SCREW	1	
B8	VHD1060	SCREW	1	
B9	VHD1071	SCREW	1	
B10	VHD0843	SCREW	1	
B11	XTS26+6F	SCREW	1	
B12	XTN26+6F	SCREW	1	
B13	XTN26+7J	SCREW	1	
B14	VHD1095	SCREW	1	
B15	VHD1185	SCREW	1	
B16	VHD0844	SCREW	1	
B17	VHD1066	SCREW	1	
B18,19	XTN26+7J	SCREW	2	

Ref.No.	Part No.	Part Name & Description	Pcs	Remarks
N1	VHN0311	PUSH NUT	1	
W1	VMX2208	CUT WASHER	1	
W2,W3	VMX3022	WASHER	2	

CASING PARTS SECTION

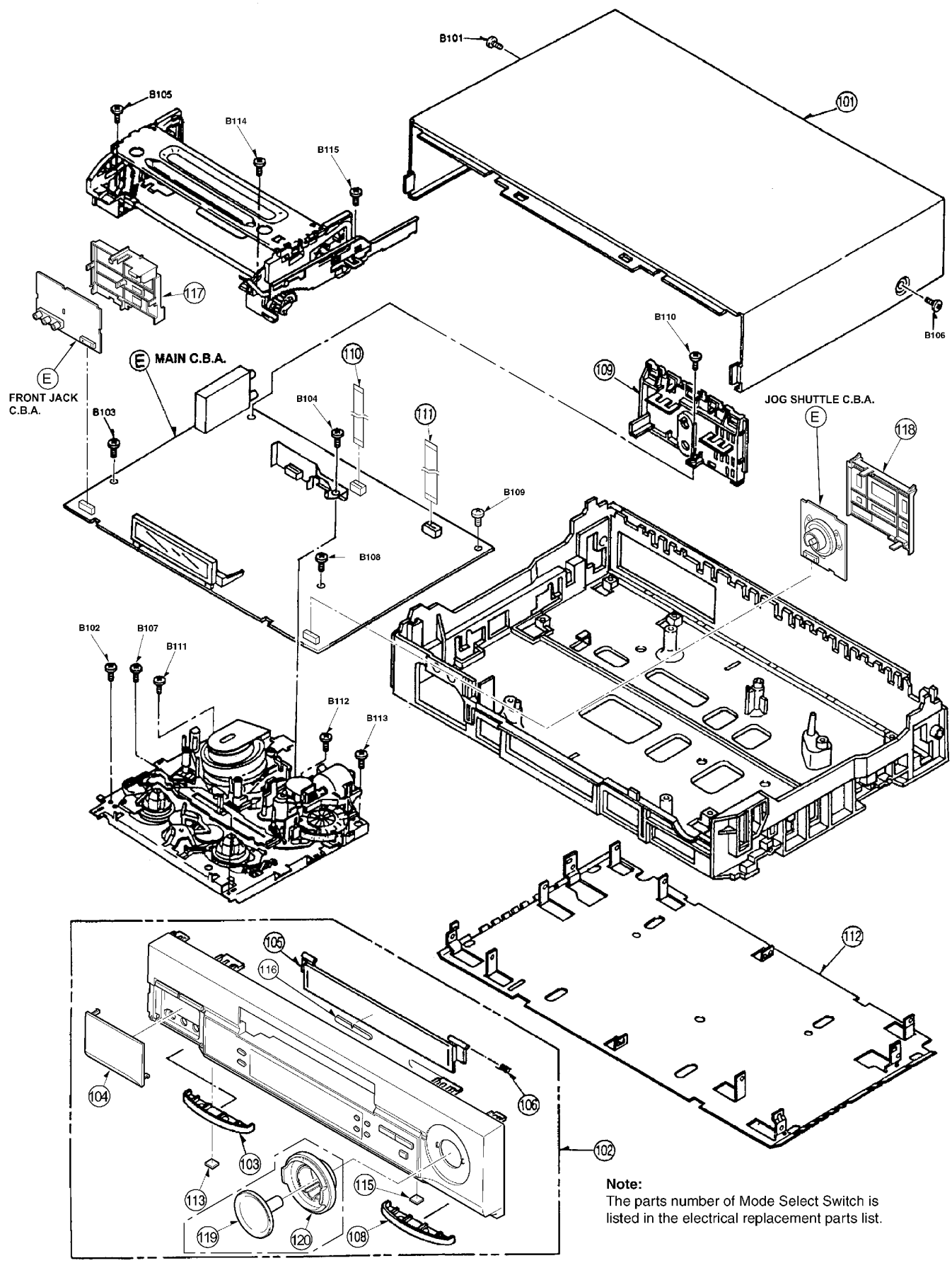

Note:
The parts number of Mode Select Switch is listed in the electrical replacement parts list.

CASING PARTS SECTION

Ref.No.	Part No.	Part Name & Description	Pcs	Remarks
101	VGM1802	TOP PANEL	1	SUPPLIED FROM MAV
102	VYP8217	FRONT PANEL ASS'Y	1	
103	VKA0192	LEG	1	
104	VKF3391	FRONT JACK DOOR	1	SUPPLIED FROM MAV
105	VKF3397	BLINDER PANEL	1	
106	VMB2521	BLINDER SPRING	1	
108	VKA0192	LEG	1	
109	VJH1186	ANT BOARD	1	SUPPLIED FROM MAV
110	VWJ06D2150MM	FLAT CARD CABLE (6P)	1	
111	VWJ1472	FLAT CARD CABLE (9P)	1	
112	VKU0573	BOTTOM PLATE	1	
113	RKA0072	FOOT	1	
115	RKA0072	FOOT	1	
116	VGB0554	SUPER DRIVE BADGE	1	
117	VGQ6104	FRONT JACK PCB HOLDER	1	SUPPLIED FROM MAV
118	VGQ6105	JOG SHUTTLE PCB HOLDER	1	SUPPLIED FROM MAV
119	VGU8864	JOG DIAL	1	SUPPLIED FROM MAV
120	VGU8912	JOG SHUTTLE ASS'Y	1	SUPPLIED FROM MAV
B101	XTW3+10TFZ	SCREW	1	
B102	VHD0168	SCREW	1	
B103	VHD1092	SCREW	1	
B104	XTN26+6JR	SCREW	1	
B105	XTV26+8FR	SCREW	1	
B106	XTW3+10TFZ	SCREW	1	
B107	VHD0168	SCREW	1	
B108-13	VHD1092	SCREW	6	
B114,15	XTV26+8FR	SCREW	2	

Ref.No.	Part No.	Part Name & Description	Pcs	Remarks

PACKING PARTS SECTION

Components identified with the mark ⚠ have the special characterisitics for safety.
When replacing any of these components, use onlly the same type.

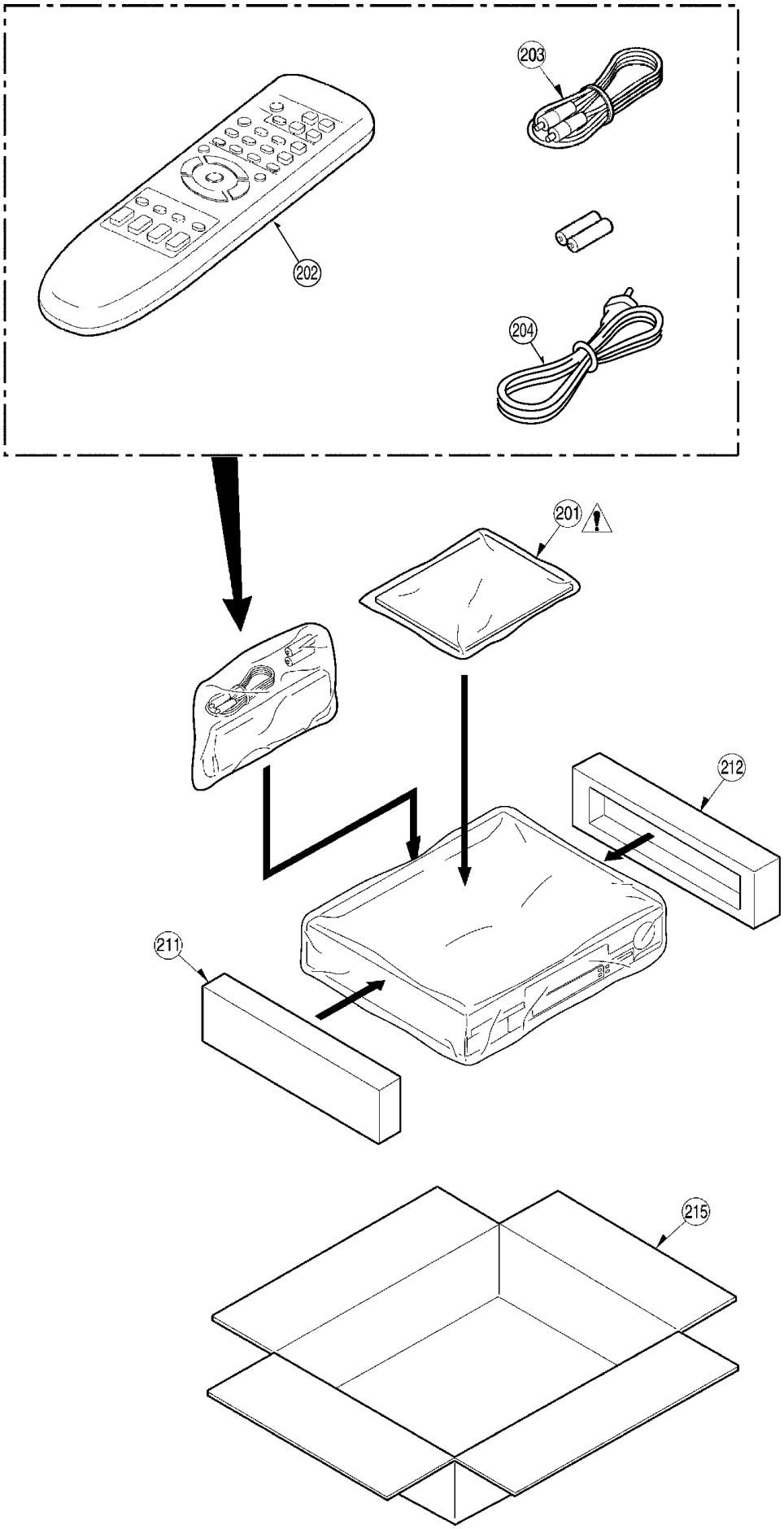

PACKING PARTS SECTION

Components identified with the mark ⚠ have the special characterisitics for safety.
When replacing any of these components, use onlly the same type.

Ref.No.	Part No.	Part Name & Description	Pcs	Remarks
⚠ 201	VQT9139	OPERATING INSTRUCTIONS	1	
202	N2QAHB000010	REMOTE CONTROLLER	1	
203	K2KZ2BA00001	RF CABLE	1	
⚠ 204	VJA0488	POWER CODE	1	K2CG3CH00001
211	VPN5359	CUSHION (L)	1	
212	VPN5360	CUSHION (R)	1	
215	VPG0J05	PACKING CASE	1	

Ref.No.	Part No.	Part Name & Description	Pcs	Remarks

9 ELECTRICAL REPLACEMENT PARTS LIST

Components identified with the mark ⚠ have the special characterisitics for safety.
When replacing any of these components, use onlly the same type.

Ref.No.	Part No.	Part Name & Description	Pcs	Remarks
■	VEP06E21E	MAIN C.B.A.	1	(RTL)
■	VEP04770A	FRONT C.B.A.	1	(RTL)
■	VEP06E11A	JOG SHUTTLE C.B.A.	1	(RTL)
■	VEP06E21E	MAIN C.B.A.	1	(RTL)
B6001	VSB0205	BATTERY	1	
⚠ C1120	ECQU2A683MVA	P.CAPACITOR 100V 0.068U	1	
⚠ C1121	ECKWNA331MBV	C.CAPACITOR 330P	1	
⚠ C1123	ECKWNA102MEV	C.CAPACITOR 1000P	1	
C1141	ECEA2EG121Y	E.CAPACITOR 250V 120P	1	
C1151	ECQB1H473JM3	P.CAPACITOR 50V 0.047U	1	SUPPLIED FROM MAV
C1152	ECQB1H103JF	P.CAPACITOR 50V 0.01U	1	
C1153	ECQB1H104JM	P.CAPACITOR 50V 0.1U	1	SUPPLIED FROM MAV
C1154	ECQB1H223JM	P.CAPACITOR 50V 0.022U	1	SUPPLIED FROM MAV
C1155	F1A3A271A028	C.CAPACITOR 1000V 270P	1	
C1200	ECQB1H104JM	P.CAPACITOR 50V 0.1U	1	SUPPLIED FROM MAV
C1210	F1B3A332A004	C.CAPACITOR 1000V 3300P	1	
C1230	EEUFG1H560B	E.CAPACITOR 50V 56U	1	
⚠ C1250	F2A1C6810002	E.CAPACITOR 16V 680U	1	
C1251	ECA1CM101	E.CAPACITOR 16V 100U	1	
C1260	F2A1A1220002	E.CAPACITOR 10V 22U	1	
C1261	ECA1AM221	E.CAPACITOR 10V 220U	1	
C1270	EEUFG1H560B	E.CAPACITOR 50V 56U	1	
C1280	EEUFG1A101B	E.CAPACITOR 10V 100U	1	
C1301	ECEA0JKA470	E.CAPACITOR 6.3V 47U	1	
C1303,04	ECJ1VF1H103Z	C.CAPACITOR CH 50V 0.01U	2	
C1341	ECJ1VF1H103Z	C.CAPACITOR CH 50V 0.01U	1	
C1342	ECEA1EKA4R7	E.CAPACITOR 25V 4.7U	1	
C1352	ECEA0JKA470	E.CAPACITOR 6.3V 47U	1	
C2001	ECJ1VC1H330J	C.CAPACITOR CH 50V 33P	1	
C2002	ECEA1CKA470	E.CAPACITOR 16V 47U	1	
C2003	ECJ1VF1H103Z	C.CAPACITOR CH 50V 0.01U	1	
C2004	F1H1A474A025	C.CAPACITOR CH 10V 0.47U	1	
C2006	ECJ1VF1C104Z	C.CAPACITOR CH 16V 0.1U	1	
C2009,10	ECJ1VC1H471J	C.CAPACITOR CH 50V 470P	2	
C2012	ECJ1VC1H681J	C.CAPACITOR CH 50V 680P	1	
C2013	ECJ1VB1C104K	C.CAPACITOR CH 16V 0.1U	1	
C2014	ECJ1VB1C563K	C.CAPACITOR CH 16V 0.056U	1	
C2015	ECJ1VF1C104Z	C.CAPACITOR CH 16V 0.1U	1	
C2051	ECEA0JKA220	E.CAPACITOR 6.3V 22U	1	
C2053	ECEA1CKA100	E.CAPACITOR 16V 10U	1	
C2054	ECJ1VB1H153K	C.CAPACITOR CH 50V 0.015U	1	
C2501-03	ECEA1VKN4R7	E.CAPACITOR 35V 4.7U	3	
C2504	ECJ1VB1C683K	C.CAPACITOR CH 16V 0.063U	1	
C2505-07	F1H1A154A028	C.CAPACITOR CH 10V 0.15U	3	
C2508	ECJ1VF1H473Z	C.CAPACITOR CH 50V 0.047U	1	
C2509	ECJ1VF1C104Z	C.CAPACITOR CH 16V 0.1U	1	
C2510	ECEA0JKA221	E.CAPACITOR 6.3V 220U	1	
C2551,52	ECJ1VB1C563K	C.CAPACITOR CH 16V 0.056U	2	
C3001	ECEA1CKA100	E.CAPACITOR 16V 10U	1	
C3002	ECEA1EKA4R7	E.CAPACITOR 25V 4.7U	1	
C3003	ECJ1VF1H103Z	C.CAPACITOR CH 50V 0.01U	1	
C3004	ECJ1VC1H151J	C.CAPACITOR CH 50V 150P	1	
C3006	F1H1A154A028	C.CAPACITOR CH 10V 0.15U	1	
C3007	ECJ1VC1H180J	C.CAPACITOR CH 50V 18P	1	
C3008	ECA0JM471B	E.CAPACITOR 6.3V 470U	1	
C3009-13	ECJ1VB1C104K	C.CAPACITOR CH 16V 0.1U	5	
C3014	ECEA1EKS3R3	E.CAPACITOR 25V 3.3U	1	
C3015	ECEA1CKA100	E.CAPACITOR 16V 10U	1	
C3016	ECEA1HKA010	E.CAPACITOR 50V 1U	1	

Ref.No.	Part No.	Part Name & Description	Pcs	Remarks
C3017	ECEA1HKA2R2	E.CAPACITOR 50V 2.2U	1	
C3018,19	ECEA1HKA010	E.CAPACITOR 50V 1U	2	
C3021	ECJ1VC1H561J	C.CAPACITOR CH 50V 560P	1	
C3022	ECJ1VF1H103Z	C.CAPACITOR CH 50V 0.01U	1	
C3025,26	ECJ1VB1C104K	C.CAPACITOR CH 16V 0.1U	2	
C3027	ECJ1VC1H270J	C.CAPACITOR CH 50V 27P	1	
C3028	ECJ1VB1C104K	C.CAPACITOR CH 16V 0.1U	1	
C3029	ECJ1VB1H103K	C.CAPACITOR CH 50V 0.01U	1	
C3033	ERJ3GEY0R00	M.RESISTOR CH 1/16W 0	1	
C3035	ERJ3GEY0R00	M.RESISTOR CH 1/16W 0	1	
C3036	ECJ1VB1C104K	C.CAPACITOR CH 16V 0.1U	1	
C3037	ECJ1VB1E223K	C.CAPACITOR CH 25V 0.022U	1	
C3038	ECEA1HKAR47	E.CAPACITOR 50V 0.47U	1	
C3039	ECEA1EKA4R7	E.CAPACITOR 25V 4.7U	1	
C3040	ECJ1VB1H472K	C.CAPACITOR CH 50V 4700P	1	
C3042	ECJ1VB1H103K	C.CAPACITOR CH 50V 0.01U	1	
C3043	ECEA1EKS3R3	E.CAPACITOR 25V 3.3U	1	
C3045	ECJ1VC1H030C	C.CAPACITOR CH 50V 2200P	1	
C3046	ECJ1VB1H103K	C.CAPACITOR CH 50V 0.01U	1	
C3047	ECJ1VC1H100D	C.CAPACITOR CH 50V 10P	1	
C3049	ECJ1VB1A224K	T.CAPACITOR CH 10V 0.22U	1	
C3050	ECJ1VF1H103Z	C.CAPACITOR CH 50V 0.01U	1	
C3051	ECJ1VC1H220J	C.CAPACITOR CH 50V 22P	1	
C3054	ECJ1VB1C104K	C.CAPACITOR CH 16V 0.1U	1	
C3063	ECJ1VB1H222K	C.CAPACITOR CH 50V 2200P	1	
C3064	ECJ1VC1H560J	C.CAPACITOR CH 50V 560P	1	
C3301	ECEA0JKA470	E.CAPACITOR 6.3V 47U	1	
C3303	ECJ1VB1H103K	C.CAPACITOR CH 50V 0.01U	1	
C3304	ECEA0JKA470	E.CAPACITOR 6.3V 47U	1	
C3305	ECJ1VB1A224K	T.CAPACITOR CH 10V 0.22U	1	
C3307	ECJ1VB1A224K	T.CAPACITOR CH 10V 0.22U	1	
C3405	ECJ1VB1H102K	C.CAPACITOR CH 50V 1000P	1	
C4009	ECQB1H223JF	P.CAPACITOR 50V 0.022U	1	SUPPLIED FROM MAV
C4010	ECEA0JKA470	E.CAPACITOR 6.3V 47U	1	
C4012	ECJ1VB1C104K	C.CAPACITOR CH 16V 0.1U	1	
C4037	ECJ1VB1H152K	C.CAPACITOR CH 50V 1500P	1	
C4038	ECJ1VB1E223K	C.CAPACITOR CH 25V 0.022U	1	
C4039	ECEA0JKA221	E.CAPACITOR 6.3V 220U	1	
C4040	ECJ1VB1H471K	C.CAPACITOR CH 50V 470P	1	
C4041,42	ECEA1EKA4R7	E.CAPACITOR 25V 4.7U	2	
C4043	ECEA0JKA220	E.CAPACITOR 6.3V 22U	1	
C4061	ECJ1VB1H103K	C.CAPACITOR CH 50V 0.01U	1	
C4062	ECEA0JKA330	E.CAPACITOR 6.3V 33U	1	
C4063	ECJ1VB1H182K	C.CAPACITOR CH 50V 1800P	1	
C4064	ECEA1EKS3R3	E.CAPACITOR 25V 3.3U	1	
C4065	ECJ1VB1H182K	C.CAPACITOR CH 50V 1800P	1	
C4502-04	ECEA1CKA100	E.CAPACITOR 16V 10U	3	
C4505	ECEA0JKA330	E.CAPACITOR 6.3V 33U	1	
C4506	ECEA1CKA100	E.CAPACITOR 16V 10U	1	
C4507	ECEA0JKA220	E.CAPACITOR 6.3V 22U	1	
C4508	ECJ1VB1C333K	C.CAPACITOR CH 50V 0.033U	1	
C4509,10	ECJ1VF1H103Z	C.CAPACITOR CH 50V 0.01U	2	
C4511	ECJ1VB1C104K	C.CAPACITOR CH 16V 0.1U	1	
C4512	ECJ1VB1A224K	T.CAPACITOR CH 10V 0.22U	1	
C4513	ECEA0JKA220	E.CAPACITOR 6.3V 22U	1	
C4514	ECEA1CKA100	E.CAPACITOR 16V 10U	1	
C4515	ECEA0JKA330	E.CAPACITOR 6.3V 33U	1	
C4516	ECEA1CKA100	E.CAPACITOR 16V 10U	1	
C4517	ECEA0JKA101	E.CAPACITOR 6.3V 100U	1	
C4519-21	ECEA1CKA100	E.CAPACITOR 16V 10U	3	
C4522	ECEA0JKA220	E.CAPACITOR 6.3V 22U	1	
C4524	ECJ1VB1C104K	C.CAPACITOR CH 16V 0.1U	1	
C4525	ECEA1CKA470	E.CAPACITOR 16V 47U	1	
C4530,31	ECJ1VC1H151J	C.CAPACITOR CH 50V 150P	2	
C4534,35	ECQB1H153JM	FILM CAPACITOR & ECQB1H15	2	SUPPLIED FROM MAV
C4536	ECJ1VF1H103Z	C.CAPACITOR CH 50V 0.01U	1	
C4537	ECJ2VC1H560G	C.CAPACITOR CH 50V 56U	1	
C4538	ECJ1VF1H103Z	C.CAPACITOR CH 50V 0.01U	1	
C4561	ECEA1CKA100	E.CAPACITOR 16V 10U	1	
C4562	ECEA1HKA010	E.CAPACITOR 50V 1U	1	
C4563	ECJ1VB1C104K	C.CAPACITOR CH 16V 0.1U	1	
C4565	ECJ1VB1C104K	C.CAPACITOR CH 16V 0.1U	1	
C4567	ECEA1HKA3R3	E.CAPACITOR 50V 3.3U	1	
C4568	ECJ1VF1H103Z	C.CAPACITOR CH 50V 0.01U	1	
C4569-71	ECJ1VB1C104K	C.CAPACITOR CH 16V 0.1U	3	

Components identified with the mark ⚠ have the special characterisitics for safety.
When replacing any of these components, use onlly the same type.

Ref.No.	Part No.	Part Name & Description	Pcs	Remarks
C4572	ECEA1HKA2R2	E.CAPACITOR 50V 2.2U	1	
C4573	ECJ1VB1E223K	C.CAPACITOR CH 25V 0.022U	1	
C4574	ECEA1HKA3R3	E.CAPACITOR 50V 3.3U	1	
C4601	ECEA1CKA100	E.CAPACITOR 16V 10U	1	
C4603	ECJ1VC1H681J	C.CAPACITOR CH 50V 680P	1	
C5001-08	ECJ1VB1H103K	C.CAPACITOR CH 50V 0.01U	8	
C5009	ECEA0JKA101	E.CAPACITOR 6.3V 100U	1	
C5010	ECJ1VB1C104K	C.CAPACITOR CH 16V 0.1U	1	
C5051	ECJ1VF1C104Z	C.CAPACITOR CH 16V 0.1U	1	
C6001	ECJ1VC1H270J	C.CAPACITOR CH 50V 27P	1	
C6002,03	ECJ1VC1H220J	C.CAPACITOR CH 50V 22P	2	
C6004	ECJ1VC1H180J	C.CAPACITOR CH 50V 18P	1	
C6005	ECEA1EKS3R3	E.CAPACITOR 25V 3.3U	1	
C6008	ECA0JM331	E.CAPACITOR 6.3V 330U	1	
C6009-11	ECJ1VF1C104Z	C.CAPACITOR CH 16V 0.1U	3	
C6012,13	ECJ1VF1H103Z	C.CAPACITOR CH 50V 0.01U	2	
C6014,15	ECJ1VB1H102K	C.CAPACITOR CH 50V 1000P	2	
C6016,17	ECJ1VC1H470J	C.CAPACITOR CH 50V 47P	2	
C6018	ECJ1VF1C104Z	C.CAPACITOR CH 16V 0.1U	1	
C6019,20	ECJ1VF1H103Z	C.CAPACITOR CH 50V 0.01U	2	
C6021	ECJ1VF1C104Z	C.CAPACITOR CH 16V 0.1U	1	
C6022,23	ECJ1VF1H103Z	C.CAPACITOR CH 50V 0.01U	2	
C6024,25	ECJ1VC1H221J	C.CAPACITOR CH 50V 220P	2	
C7501	ECJ1VC1H120J	C.CAPACITOR CH 50V 12P	1	
C7502	ECJ1VF1C104Z	C.CAPACITOR CH 16V 0.1U	1	
C7503	ECJ2VF1H104Z	C.CAPACITOR CH 50V 0.1U	1	
C7504	ECEA0JKA101	E.CAPACITOR 6.3V 100U	1	
C7505	ECEA1VKA100	E.CAPACITOR 35V 10U	1	
C7601	ECEA1HKA010	E.CAPACITOR 50V 1U	1	
C7602	ECJ1VF1C224Z	C.CAPACITOR CH 16V 0.22U	1	
C7605	ECEA0JKA101	E.CAPACITOR 6.3V 100U	1	
C7608	ECJ1VF1H103Z	C.CAPACITOR CH 50V 0.01U	1	
C7614	ECJ1VB1H102K	C.CAPACITOR CH 50V 1000P	1	
C7616	ECEA0JKA470	E.CAPACITOR 6.3V 47U	1	
C7701	ECJ1VB1C333K	C.CAPACITOR CH 50V 0.033U	1	
C7703	ECEA0JKA101	E.CAPACITOR 6.3V 100U	1	
C7704,05	ECJ1VF1H103Z	C.CAPACITOR CH 50V 0.01U	2	
C7706	ECJ1VC1H471J	C.CAPACITOR CH 50V 470P	1	
C7707	ECJ1VB1H102K	C.CAPACITOR CH 50V 1000P	1	
C7708	ECJ1VC1H471J	C.CAPACITOR CH 50V 470P	1	
C7709	ECJ1VB1H182K	C.CAPACITOR CH 50V 1800P	1	
C7710	ECJ1VF1A105Z	C.CAPACITOR CH 10V 1U	1	
C7711	ECJ1VB1H102K	C.CAPACITOR CH 50V 1000P	1	
C7712	ECJ1VC1H101J	C.CAPACITOR CH 50V 100P	1	
C7713	ECJ1VC1H820J	C.CAPACITOR CH 50V 82P	1	
⚠ D1110	ERZVA5Z471	DIODE	1	
D1140	DF08S-6622	DIODE	1	SUPPLIED FROM MAV
D1150	AU01ZV2	DIODE	1	
D1152	MA185	DIODE	1	
D1155	1SS254	DIODE	1	
D1157	MA4027-L	DIODE	1	
D1180	MA7510-TR	DIODE	1	SUPPLIED FROM MAV
D1230	MA185	DIODE	1	
D1250,51	AK06	DIODE	2	
D1260	AK04	DIODE	1	B0JAME000037
D1270	MA185	DIODE	1	
D1280	MA185	DIODE	1	
D1301	MA4075N-M	DIODE	1	
D1302	MA4056N-H	DIODE	1	MAZ4056NH
D1341	MA4130N-L	DIODE	1	SUPPLIED FROM MAV
D1351	MA4056N-H	DIODE	1	MAZ4056NH
D2001,02	1SS254	DIODE	2	
D4501	1SS254	DIODE	1	
D6001,02	1SS254	DIODE	2	
D6003	MA2C700A0F	DIODE	1	
D6005	1SS254	DIODE	1	
D6006	SIR505S	DIODE	1	
D6008	1SS254	DIODE	1	
D7502	MAZ4220N0F	DIODE	1	
D7602	MA4300N-M	DIODE	1	SUPPLIED FROM MAV
DP7501	A2BD00000040	LED	1	
⚠ F1101	K5D162BK0002	FUSE	1	SUPPLIED FROM MAV

Ref.No.	Part No.	Part Name & Description	Pcs	Remarks
FL4561	EFCT4R5MS5	SIF CERAMIC FILTER	1	
IC1200	UPC1093J	IC	1	C0DAEMC00002
IC2501	AN3811NK	IC	1	
IC3001	C1AB00001297	IC	1	
IC4501	AN3663FBP-AV	HI-FI IC	1	SUPPLIED FROM MAV
IC6001	C2CBHF000188	U-CON IC	1	
IC6002	RN5VS42CA	RESET IC	1	
IC6003	PNA4611M08VT	IC	1	
IC6004,05	RPI354N	IC	2	
IC6006	C3EAEC000023	WRITTEN EEPROM	1	SUPPLIED FROM MAV
IC7501	C0HBB0000023	FIP DRIVE IC	1	
⚠ IP1280	D4FAR4000001	IC	1	
JK3002	VJJ0675	I/O JACK	1	
K4001	ERJ3GEY0R00	M.RESISTOR CH 1/16W 0	1	
K4006	ERJ3GEY0R00	M.RESISTOR CH 1/16W 0	1	
K4009	ERJ3GEY0R00	M.RESISTOR CH 1/16W 0	1	
K4501	ERJ3GEY0R00	M.RESISTOR CH 1/16W 0	1	
K6001	ERJ3GEY0R00	M.RESISTOR CH 1/16W 0	1	
K6003	ERJ3GEY0R00	M.RESISTOR CH 1/16W 0	1	
K7614	ERJ3GEY0R00	M.RESISTOR CH 1/16W 0	1	
K7701	ERJ3GEY0R00	M.RESISTOR CH 1/16W 0	1	
⚠ L1120,21	G0B553C00001	LINE FILTER	2	
L1250	G0A220G00018	COIL	1	
L1260	G0A220G00018	COIL	1	
L2001	VLQ0599J680	COIL 68UH	1	
L2501	VLQ0599J680	COIL 68UH	1	
L3002	VLQ0599J391	COIL 390UH	1	
L3006	VLQ0599J120	COIL 12UH	1	
L3008	VLQ0599J180	COIL 18UH	1	
L3009	VLQ0599J390	COIL 39UH	1	
L3301	G0C330JA0030	COIL 33UH	1	
L3302,03	G0C680JA0030	COIL 68UH	2	
L4004	VLQEL05S471K	COIL 470UH	1	
L4501	G0C1R2J00004	COIL 1.2UH	1	
L4502	G0C391JA0030	COIL 390UH	1	
L5001	G0C680JA0030	COIL 68UH	1	
L7601	G0C100JA0030	COIL 10UH	1	
L7605	G0C100JA0030	COIL 10UH	1	
L7701	VLQ0599J5R6	COIL 5.6UH	1	
LB1120	J0JKB0000028	JUMPER	1	
LB1210	J0JKB0000028	JUMPER	1	
LB3001,02	ERJ3GEY0R00	M.RESISTOR CH 1/16W 0	2	
LB4001-04	ERJ3GEY0R00	M.RESISTOR CH 1/16W 0	4	
LB5040-44	VLP0146	COIL	5	
LB5047	VLP0146	COIL	1	
LB5048,49	ERJ3GEY0R00	M.RESISTOR CH 1/16W 0	2	
LB6001	ERJ3GEY0R00	M.RESISTOR CH 1/16W 0	1	
LB6002	VLP0147	COIL	1	
LB7701	ERJ3GEY0R00	M.RESISTOR CH 1/16W 0	1	
LR1150	J1ZZA0000001	DELAY LINE	1	
⚠ P1103	K2AH3B000009	AC INLET (3P)	1	
P2001	K1KB02A00035	CONNECTOR (FEMALE)	1	
P2002	K1KA12A00127	CONNECTOR (MALE)	1	
P2501	VJS3537A009G	CONNECTOR (FEMALE)	1	K1MN09A00012
P4001	VJS3537A006G	CONNECTOR (FEMALE)	1	
P4002	K1KB02A00035	CONNECTOR (FEMALE)	1	
P5001	VJS3537A010G	CONNECTOR (FEMALE)	1	
PP4001	VJP3042G008W	CONNECTOR (MALE) 8P	1	K1KA08A00163
PP6301	VJP3042G007W	CONNECTOR (MALE)	1	K1KA07A00084
Q1150	B1DEDR000003	TRANSISTOR	1	
Q1151	2SD1992A-R	TRANSISTOR	1	
Q1152	2SC3311A-S	TRANSISTOR	1	
Q1153	B1DEDQ000014	TRANSISTOR	1	
⚠ Q1200	B3PBA0000078	PHOTO COUPLER	1	

Ref.No.	Part No.	Part Name & Description	Pcs	Remarks
Q1341	2SD1996	TRANSISTOR	1	
Q2001	2SC1959YT2M	TRANSISTOR	1	
Q2002	R2T2SD601AX	TRANSISTOR	1	2SD0601A0L
Q3004	R2T2SB709AX	TRANSISTOR	1	2SB0709A0L
Q3005	R2T2SD601AX	TRANSISTOR	1	2SD0601A0L
Q3009	R2T2SB709AX	TRANSISTOR	1	2SB0709A0L
Q3010	2SC1959YT2M	TRANSISTOR	1	
Q4003	2SD1149	TRANSISTOR	1	
Q4004	R2T2SD601AX	TRANSISTOR	1	2SD0601A0L
Q4005	2SD602A-R	TRANSISTOR	1	
Q4006	2SB710A	TRANSISTOR	1	
Q4007	2SC1959YT2M	TRANSISTOR	1	
Q4501	2SC1959YT2M	TRANSISTOR	1	
Q6001	R2T2SD601AX	TRANSISTOR	1	2SD0601A0L
Q6002	PNB2301MBV	TRANSISTOR	1	
Q6003	PNB2301MAV	TRANSISTOR	1	
QR3011	UN2213	TRANSISTOR-RESISTOR	1	
QR3150	UN2213	TRANSISTOR-RESISTOR	1	
QR4001	UN2111	TRANSISTOR-RESISTOR	1	
QR4504	UN2115	TRANSISTOR-RESISTOR	1	
QR4505,06	UN2215	TRANSISTOR-RESISTOR	2	
QR6002	UN2211	TRANSISTOR-RESISTOR	1	
R1150	ERDS2TJ105	C.RESISTOR 1/4W 1M	1	
R1153	ERG2SJ331	M.RESISTOR 2W 330	1	
R1154	ERDS2TJ105	C.RESISTOR 1/4W 1M	1	
R1155	ERDS2TJ104	C.RESISTOR 1/4W 100K	1	
R1156	ERDS2TJ330	C.RESISTOR 1/4W 33	1	
R1157	ER0S2CKG1601	M.RESISTOR 2W 1.6K	1	
R1158	ERDS2TJ331	C.RESISTOR 1/4W 330	1	
R1159	ERDS2TJ3R3	C.RESISTOR 1/4W 3.3	1	
R1160	ERX1SJR51	M.RESISTOR 1W 0.51	1	
R1161	ERDS2TJ101	C.RESISTOR 1/4W 100	1	
R1162	ERDS2TJ102	C.RESISTOR 1/4W 1K	1	
R1163	ERDS2TJ101	C.RESISTOR 1/4W 100	1	
R1200	ERJ3GEYF103	CHIP RESISTOR	1	
R1202	ERJ3GEYF222	CHIP RESISTOR	1	
R1203	ERJ3GEYF303	CHIP RESISTOR	1	
R1204	ERDS2TJ123	C.RESISTOR 1/4W 12K	1	
R1205	ERJ3GEYJ222	M.RESISTOR CH 1/16W 2.2K	1	
R1206	ERJ3GEYJ271	M.RESISTOR CH 1/16W 270	1	
R1301	ERJ3GEYG152	M.RESISTOR CH 1/16W 1.5K	1	
R1302	ERJ3GEYJ182	M.RESISTOR CH 1/16W 1.8K	1	
R1303-05	ERDS2TJ471	C.RESISTOR 1/4W 470	3	
R1341,42	ERDS2TJ103	C.RESISTOR 1/4W 10K	2	
R1351	ERDS2TJ471	C.RESISTOR 1/4W 470	1	
R2001	ERJ3GEYJ101	M.RESISTOR CH 1/16W 100	1	
R2002	ERJ3GEYJ105	M.RESISTOR CH 1/16W 1M	1	
R2003	ERJ3GEYJ392	M.RESISTOR CH 1/16W 3.9K	1	
R2004	ERJ3GEYJ222	M.RESISTOR CH 1/16W 2.2K	1	
R2006	ERJ3GEYG682	M.RESISTOR CH 1/16W 6.8K	1	
R2501	ERJ3GEYJ103	M.RESISTOR CH 1/16W 10K	1	
R2504	ERDS2TJ1R5	C.RESISTOR 1/4W 1.5	1	
R2505	ERDS2TJ1R2	C.RESISTOR 1/4W 1.2	1	
R2506	ERDS2TJ331	C.RESISTOR 1/4W 330	1	
R2507-09	ERDS2TJ330	C.RESISTOR 1/4W 33	3	
R2552	ERJ3GEYJ103	M.RESISTOR CH 1/16W 10K	1	
R3001	ERJ3GEYJ622	M.RESISTOR CH 1/16W 6.2K	1	
R3003	ERJ3GEYG152	M.RESISTOR CH 1/16W 1.5K	1	
R3005	ERJ3GEYJ392	M.RESISTOR CH 1/16W 3.9K	1	
R3007	ERJ3GEYJ222	M.RESISTOR CH 1/16W 2.2K	1	
R3008	ERJ3GEYJ153	M.RESISTOR CH 1/16W 15K	1	
R3009	ERJ3GEYJ750	M.RESISTOR CH 1/16W 75	1	
R3011	ERJ3GEY0R00	M.RESISTOR CH 1/16W 0	1	
R3015	ERJ3GEYG102	M.RESISTOR CH 1/16W 1K	1	
R3016	ERJ3GEYJ331	M.RESISTOR CH 1/16W 330	1	
R3017	ERJ3GEYJ680	M.RESISTOR CH 1/16W 68	1	
R3018	ERJ3GEY0R00	M.RESISTOR CH 1/16W 0	1	
R3021	ERJ3GEYJ273	M.RESISTOR CH 1/16W 27K	1	
R3022	ERJ3GEYJ681	M.RESISTOR CH 1/16W 680	1	
R3024	ERDS2TJ681	C.RESISTOR 1/4W 680	1	
R3025	ERJ3GEYG471	M.RESISTOR CH 1/16W 470	1	
R3028	ERJ3GEYG102	M.RESISTOR CH 1/16W 1K	1	
R3030	ERJ3GEY0R00	M.RESISTOR CH 1/16W 0	1	

Ref.No.	Part No.	Part Name & Description	Pcs	Remarks
R3034	ERJ3GEYJ222	M.RESISTOR CH 1/16W 2.2K	1	
R3035	ERJ3GEYG102	M.RESISTOR CH 1/16W 1K	1	
R3044	ERJ3GEYJ222	M.RESISTOR CH 1/16W 2.2K	1	
R3045	ERJ3GEYJ750	M.RESISTOR CH 1/16W 75	1	
R3048	ERJ3GEYJ221	M.RESISTOR CH 1/16W 220	1	
R3049	ERJ3GEYJ392	M.RESISTOR CH 1/16W 3.9K	1	
R3150	ERJ3GEYJ123	M.RESISTOR CH 1/16W 12K	1	
R3502	ERJ3GEYG152	M.RESISTOR CH 1/16W 1.5K	1	
R4001,02	ERJ3GEYG471	M.RESISTOR CH 1/16W 470	2	
R4009	ERJ3GEY0R00	M.RESISTOR CH 1/16W 0	1	
R4013	ERJ3GEYJ153	M.RESISTOR CH 1/16W 15K	1	
R4014	ERJ3GEYG332	M.RESISTOR CH 1/16W 3.3K	1	
R4019	ERJ3GEY0R00	M.RESISTOR CH 1/16W 0	1	
R4020,21	ERJ3GEYG471	M.RESISTOR CH 1/16W 470	2	
R4037	ERJ3GEYG472	M.RESISTOR CH 1/16W 4.7K	1	
R4038	ERJ3GEYJ222	M.RESISTOR CH 1/16W 2.2K	1	
R4039	ERJ3GEYJ103	M.RESISTOR CH 1/16W 10K	1	
R4040	ERJ3GEYG332	M.RESISTOR CH 1/16W 3.3K	1	
R4041	ERJ3GEYJ622	M.RESISTOR CH 1/16W 6.2K	1	
R4042	ERJ3GEYJ222	M.RESISTOR CH 1/16W 2.2K	1	
R4043	ERJ3GEYG332	M.RESISTOR CH 1/16W 3.3K	1	
R4044	ERJ3GEYJ153	M.RESISTOR CH 1/16W 15K	1	
R4061	ERJ3GEYJ334	M.RESISTOR CH 1/16W 330K	1	
R4062	ERJ3GEYJ103	M.RESISTOR CH 1/16W 10K	1	
R4063	ERJ3GEYJ221	M.RESISTOR CH 1/16W 220	1	
R4064	ERJ3GEYJ153	M.RESISTOR CH 1/16W 15K	1	
R4083	ERJ3GEYJ103	M.RESISTOR CH 1/16W 10K	1	
R4500	ERJ3GEYG102	M.RESISTOR CH 1/16W 1K	1	
R4502,03	ERJ3GEYJ473	M.RESISTOR CH 1/16W 47K	2	
R4504	ERJ3GEYG332	M.RESISTOR CH 1/16W 3.3K	1	
R4505,06	ERJ3GEYG682	M.RESISTOR CH 1/16W 6.8K	2	
R4508	ERJ3GEYG102	M.RESISTOR CH 1/16W 1K	1	
R4509	ERJ3GEYJ473	M.RESISTOR CH 1/16W 47K	1	
R4510	ERJ3GEYG682	M.RESISTOR CH 1/16W 6.8K	1	
R4511	ERJ3GEYJ473	M.RESISTOR CH 1/16W 47K	1	
R4512	ERJ3GEYG682	M.RESISTOR CH 1/16W 6.8K	1	
R4520	ERJ3GEYG332	M.RESISTOR CH 1/16W 3.3K	1	
R4526	ERJ3GEYJ681	M.RESISTOR CH 1/16W 680	1	
R4530	ERJ3GEY0R00	M.RESISTOR CH 1/16W 0	1	
R4532	ERJ3GEY0R00	M.RESISTOR CH 1/16W 0	1	
R4534	ERJ3GEYJ124	M.RESISTOR CH 1/16W 120K	1	
R4538	ERJ3GEYJ303	M.RESISTOR CH 1/16W 30K	1	
R4539,40	ERJ3GEYJ331	M.RESISTOR CH 1/16W 330	2	
R4562,63	ERJ3GEYG102	M.RESISTOR CH 1/16W 1K	2	
R4581,82	ERJ3GEYJ681	M.RESISTOR CH 1/16W 680	2	
R4601	ERJ3GEYJ273	M.RESISTOR CH 1/16W 27K	1	
R4602	ERJ3GEYG682	M.RESISTOR CH 1/16W 6.8K	1	
R6001	ERJ3GEYG332	M.RESISTOR CH 1/16W 3.3K	1	
R6002	ERJ3GEYG102	M.RESISTOR CH 1/16W 1K	1	
R6003	ERJ3GEYJ154	M.RESISTOR CH 1/16W 150K	1	
R6004,05	ERJ3GEYG332	M.RESISTOR CH 1/16W 3.3K	2	
R6006	ERJ3GEYJ183	M.RESISTOR CH 1/16W 18K	1	
R6007	ERJ3GEYG332	M.RESISTOR CH 1/16W 3.3K	1	
R6008	ERJ3GEYG102	M.RESISTOR CH 1/16W 1K	1	
R6009	ERJ3GEYJ473	M.RESISTOR CH 1/16W 47K	1	
R6010	ERJ3GEYJ221	M.RESISTOR CH 1/16W 220	1	
R6011	ERJ3GEYJ103	M.RESISTOR CH 1/16W 10K	1	
R6013,14	ERJ3GEYJ221	M.RESISTOR CH 1/16W 220	2	
R6015	ERJ3GEYJ473	M.RESISTOR CH 1/16W 47K	1	
R6016,17	ERJ3GEYG332	M.RESISTOR CH 1/16W 3.3K	2	
R6018	ERJ3GEYJ221	M.RESISTOR CH 1/16W 220	1	
R6019	ERJ3GEYJ473	M.RESISTOR CH 1/16W 47K	1	
R6020	ERJ3GEYJ223	M.RESISTOR CH 1/16W 22K	1	
R6021	ERJ3GEYJ183	M.RESISTOR CH 1/16W 18K	1	
R6022	ERJ3GEYJ243	M.RESISTOR CH 1/16W 24K	1	
R6023	ERJ3GEYG332	M.RESISTOR CH 1/16W 3.3K	1	
R6025,26	ERJ3GEYJ223	M.RESISTOR CH 1/16W 22K	2	
R6029	ERDS2TJ121	C.RESISTOR 1/4W 120	1	D0AE121JA045
R6030	ERDS2TJ181	C.RESISTOR 1/4W 180	1	
R6031,32	ERJ3GEYJ273	M.RESISTOR CH 1/16W 27K	2	
R6033	ERJ3GEYJ393	M.RESISTOR CH 1/16W 39K	1	
R6034	ERJ3GEYJ273	M.RESISTOR CH 1/16W 27K	1	
R6037	ERJ3GEYJ103	M.RESISTOR CH 1/16W 10K	1	
R6102	ERJ3GEYJ222	M.RESISTOR CH 1/16W 2.2K	1	
R6103-05	ERJ3GEYJ221	M.RESISTOR CH 1/16W 220	3	

Components identified with the mark ⚠ have the special characterisitics for safety.
When replacing any of these components, use onlly the same type.

Ref.No.	Part No.	Part Name & Description	Pcs	Remarks
R7501	ERJ3GEYJ154	M.RESISTOR CH 1/16W 150K	1	
R7503	ERJ3GEYJ103	M.RESISTOR CH 1/16W 10K	1	
R7504	ERJ3GEYJ101	M.RESISTOR CH 1/16W 100	1	
R7505,06	ERJ3GEYJ123	M.RESISTOR CH 1/16W 12K	2	
R7507,08	ERJ3GEYJ221	M.RESISTOR CH 1/16W 220	2	
R7510	ERDS2TJ821	C.RESISTOR 1/4W 820	1	
R7512	ERDS2TJ150	C.RESISTOR 1/4W 15	1	
R7514	ERJ3GEYJ362	M.RESISTOR CH 1/16W 3.6K	1	
R7515	ERJ3GEYJ392	M.RESISTOR CH 1/16W 3.9K	1	
R7516	ERJ3GEYJ512	M.RESISTOR CH 1/16W 5.1K	1	
R7517	ERJ3GEYJ362	M.RESISTOR CH 1/16W 3.6K	1	
R7518	ERJ3GEYJ912	M.RESISTOR CH 1/16W 9.1K	1	
R7519	ERJ3GEYJ512	M.RESISTOR CH 1/16W 5.1K	1	
R7521	ERJ3GEYJ392	M.RESISTOR CH 1/16W 3.9K	1	
R7601	ERDS2TJ102	C.RESISTOR 1/4W 1K	1	
R7607-10	ERJ3GEY0R00	M.RESISTOR CH 1/16W 0	4	
R7701	ERJ3GEYJ222	M.RESISTOR CH 1/16W 2.2K	1	
R7702	ERJ3GEYG102	M.RESISTOR CH 1/16W 1K	1	
R7703	ERJ3GEY0R00	M.RESISTOR CH 1/16W 0	1	
R7708	ERJ3GEYJ681	M.RESISTOR CH 1/16W 680	1	
R7712	ERJ3GEYJ105	M.RESISTOR CH 1/16W 1M	1	
S2001	K0G934A00002	MODE SWITCH	1	
S6001	K0C111A00003	SWITCH	1	
S7503	EVQ11L07B	SWITCH	1	
S7504,05	EVQ11G07K	SWITCH	2	
S7506	EVQ11L07B	SWITCH	1	
S7507	EVQ11G07K	SWITCH	1	
S7508,09	EVQ11G04M	SWITCH	2	
S7510	EVQ11L07B	SWITCH	1	
S7511	EVQ11G07K	SWITCH	1	
⚠ T1150	G4D2A0000051	SW TRANSISTOR	1	SUPPLIED FROM MAV
T4002	VLT0948	IF TRANSFORMER	1	
⚠ TU7601	ENG56720G1	TUNER	1	
W503	ERJ3GEY0R00	M.RESISTOR CH 1/16W 0	1	
W505	ERJ3GEY0R00	M.RESISTOR CH 1/16W 0	1	
W507-13	ERJ3GEY0R00	M.RESISTOR CH 1/16W 0	7	
W518,19	ERJ3GEY0R00	M.RESISTOR CH 1/16W 0	2	
W522,23	ERJ3GEY0R00	M.RESISTOR CH 1/16W 0	2	
W525-29	ERJ3GEY0R00	M.RESISTOR CH 1/16W 0	5	
W531	ERJ3GEY0R00	M.RESISTOR CH 1/16W 0	1	
X3001	VSX0803	CRYSTAL OSCILLATOR	1	
X6001	H0A120500002	CRYSTAL OSCILLATOR	1	SUPPLIED FROM MAV
X6002	VSX1022	CRYSTAL OSCILLATOR	1	
⚠ ZA1101,02	EYF52BC	FUSE HOLDER	2	
ZA1105	VMA6768	EARTH ANGLE	1	
ZA3501	VSC4998	HA ANGLE	1	
		MISCELLANEOUS		
	C3EAEC000013	EEPROM	1	
	C3EAEC000023	CORRECTION VER.	1	SUPPLIED FROM MAV
⚠	VEY0158	AC INLET ASS'Y	1	SUPPLIED FROM MAV
⚠	VEE0H62	POWER EARTH CABLE	1	
⚠	VJR0453	LUG TERMINAL	1	
■	VEP04770A	FRONT C.B.A.	1	(RTL)
JK4801	K2HA303A0004	3P DC JACK	1	
PS4801	VJS3042B008W	CONNECTOR (FEMALE) 8P	1	K1KB08B00027
S4802,03	EVQ11G07K	SWITCH	2	

Ref.No.	Part No.	Part Name & Description	Pcs	Remarks
■	VEP06E11A	JOG SHUTTLE C.B.A.	1	(RTL)
PS6301	VJS3042F007W	2MM PACK SOCKET	1	K1KB07B00013
S6309	EVQWM6001	ENCODER VR	1	

Panasonic

Printed in Japan
FCD0109TkSZF107

◀ : VIDEO MAIN SIGNAL PATH IN REC MODE
◁ : VIDEO MAIN SIGNAL PATH IN PLAYBACK MODE
◀ : AUDIO MAIN SIGNAL PATH IN REC MODE
◁ : AUDIO MAIN SIGNAL PATH IN PLAYBACK MODE

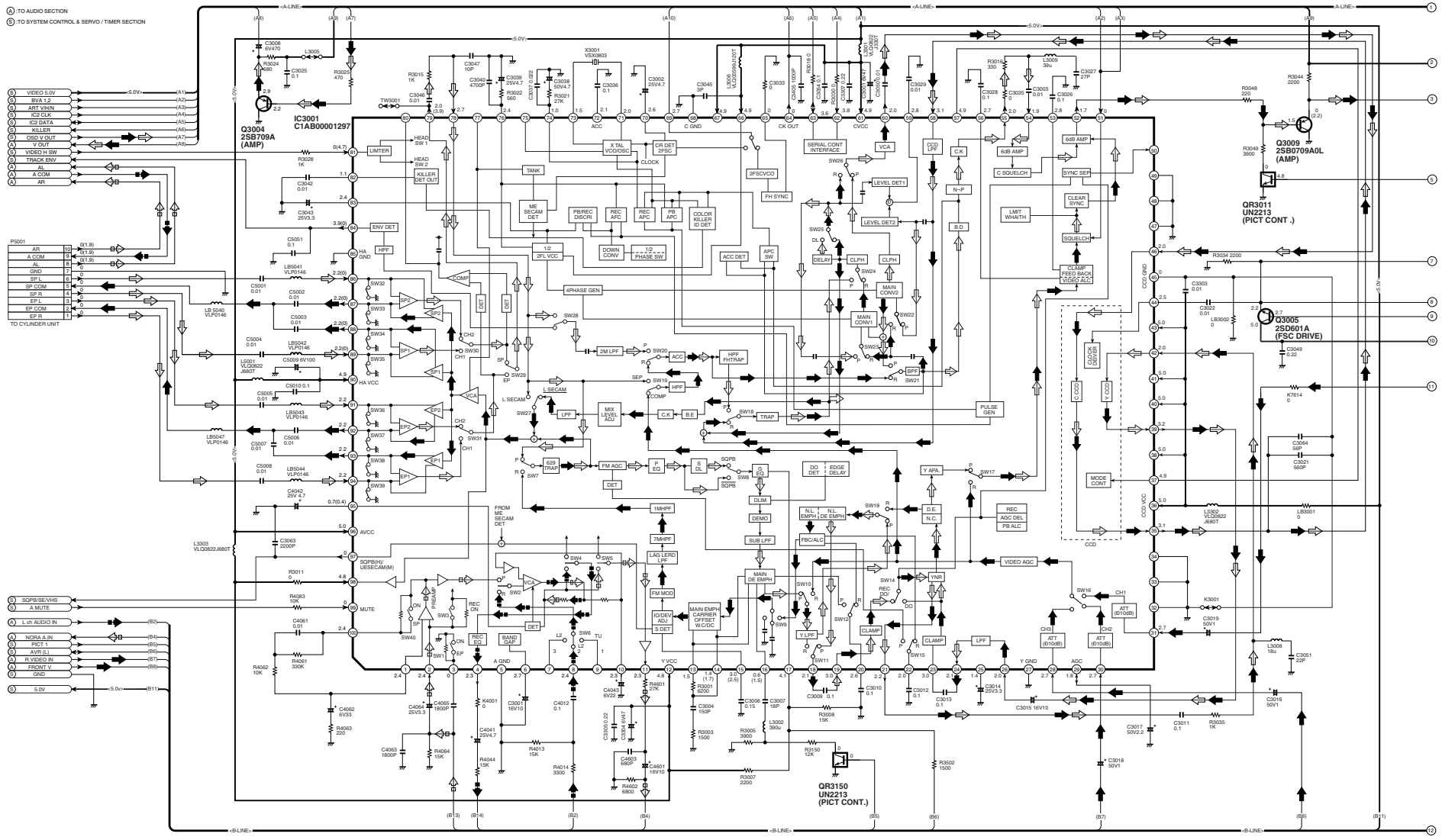

NOTE : THE MEASUREMENT MODE OF THE DC VOLTAGE IN THE BRACKETS ( ) ON THIS DIAGRAM IS RECORD MODE WITH NTSC COLOUR SIGNAL. (SP MODE)
THE MEASUREMENT MODE OF THE DC VOLTAGE OUT OF THE BRACKETS ON THIS DIAGRAM IS PLAYBACK MODE WITH NTSC COLOUR SIGNAL. (SP MODE)

NOTE : DO NOT USE ANY PARTS NUMBER SHOWN ON THIS SCHEMATIC DIAGRAM FOR ORDERING.
WHEN YOU ORDER A PART, PLEASE REFER TO PARTS LIST.

COMPONENT NAME	VIDEO SECTION	01/02
CIRCUIT BOARD NO.		DRAWING NO.
VEP06E21E		SCM004

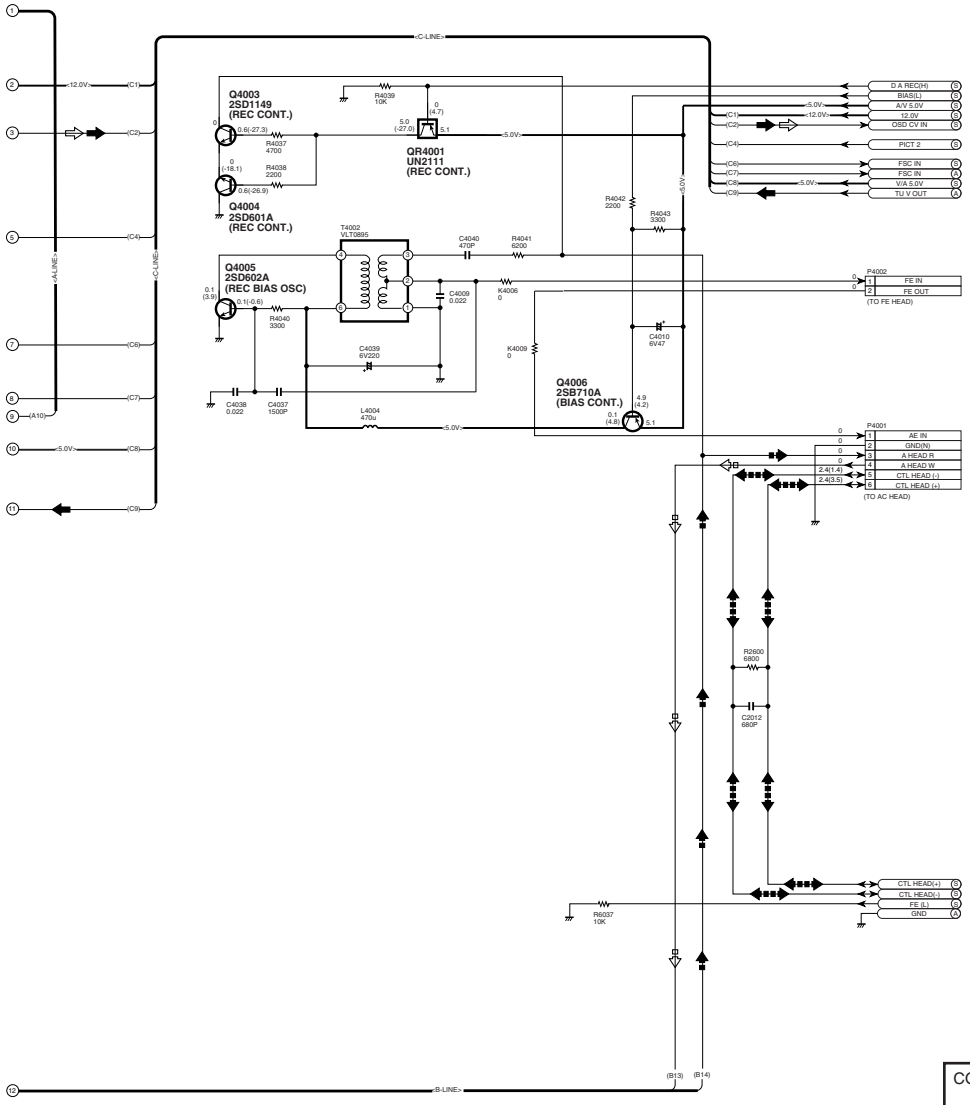

COMPONENT NAME	VIDEO SECTION	02/02
CIRCUIT BOARD NO.		DRAWING NO.
VEP06E21E		SCM005

:VIDEO MAIN SIGNAL PATH IN REC MODE :VIDEO MAIN SIGNAL PATH IN PLAYBACK MODE
:AUDIO MAIN SIGNAL PATH IN REC MODE :AUDIO MAIN SIGNAL PATH IN PLAYBACK MODE

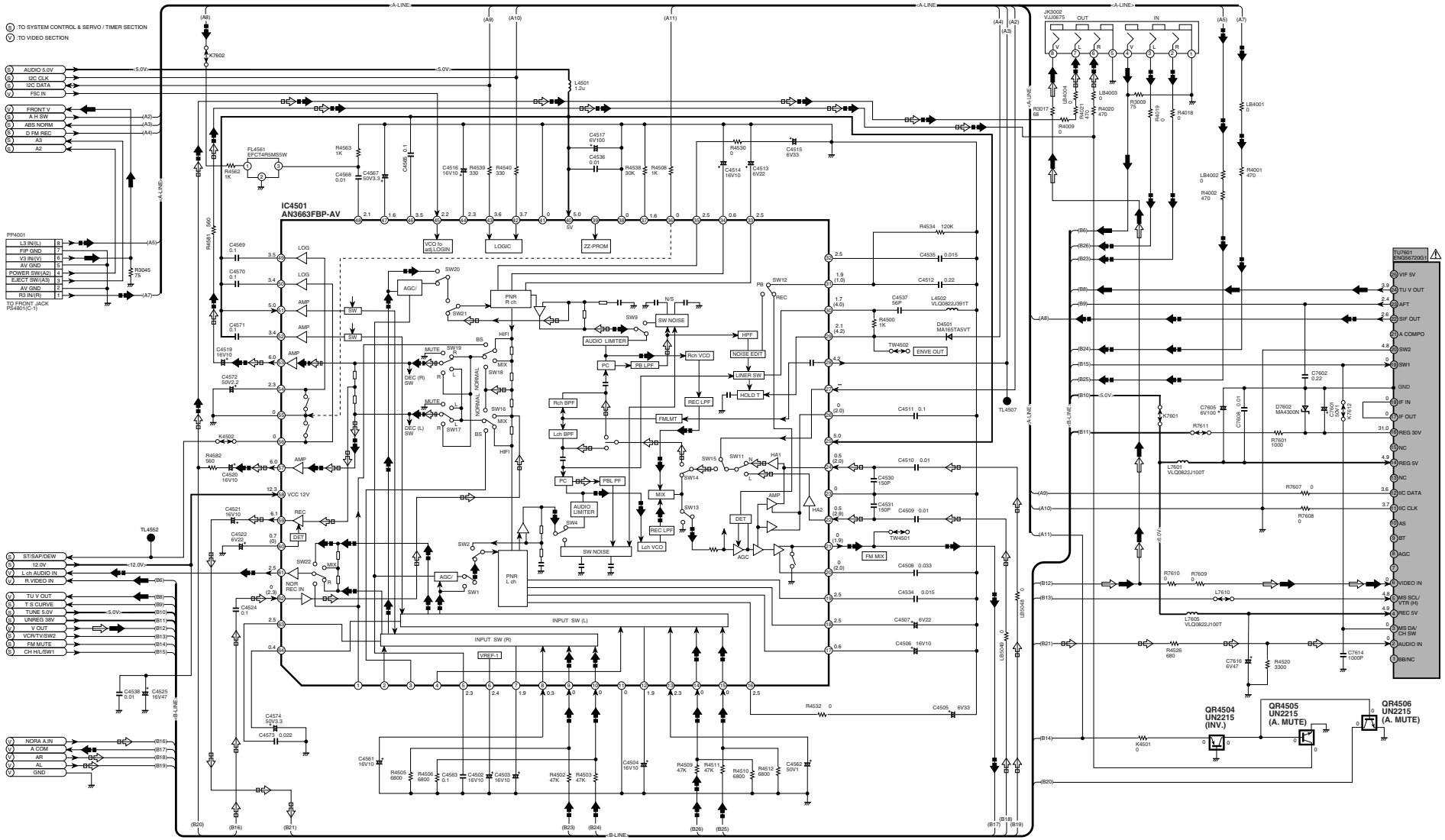

NOTE : THE MEASUREMENT MODE OF THE DC VOLTAGE IN THE BRACKETS ( ) ON THIS DIAGRAM IS RECORD MODE WITH NTSC COLOUR SIGNAL. (SP MODE) THE MEASUREMENT MODE OF THE DC VOLTAGE OUT OF THE BRACKETS ON THIS DIAGRAM IS PLAYBACK MODE WITH NTSC COLOUR SIGNAL. (SP MODE)

IMPORTANT SAFETY NOTICE:
COMPONENTS IDENTIFIED WITH THE MARK ⚠ HAVE THE SPECIAL CHARACTERISTICS FOR SAFETY.
WHEN REPLACING ANY OF THESE COMPONENTS USE ONLY THE SAME TYPE.

NOTE : DO NOT USE ANY PARTS NUMBER SHOWN ON THIS SCHEMATIC DIAGRAM FOR ORDERING.
WHEN YOU ORDER A PART, PLEASE REFER TO PARTS LIST.

COMPONENT NAME	AUDIO SECTION	01/01
CIRCUIT BOARD NO.		DRAWING NO.
VEP06E21E		SCM006

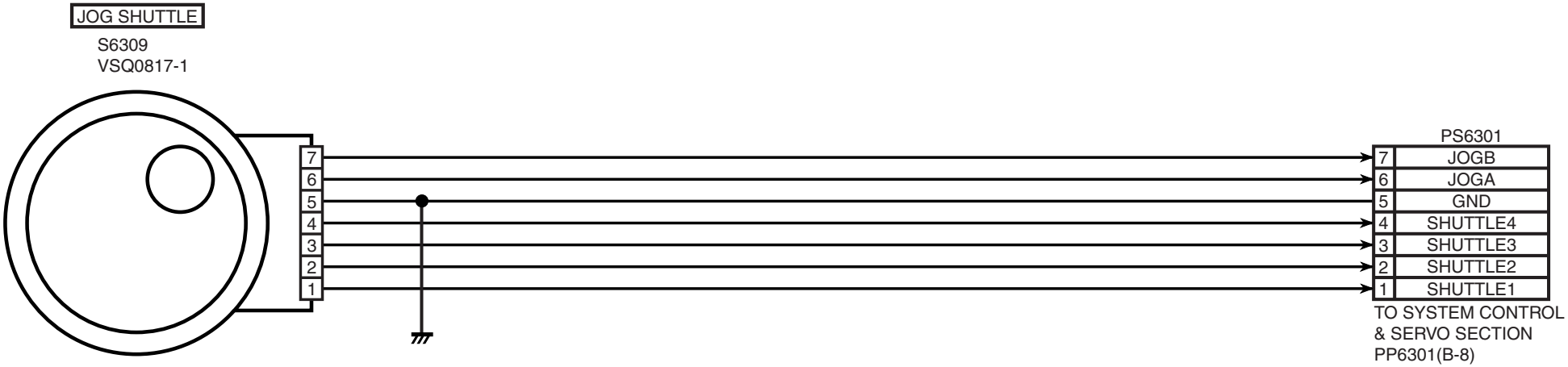

NOTE : DO NOT USE ANY PARTS NUMBER SHOWN ON THIS SCHEMATIC DIAGRAM FOR ORDERING.
WHEN YOU ORDER A PART, PLEASE REFER TO PARTS LIST.

COMPONENT NAME	JOG SHUTTLE	01/01
CIRCUIT BOARD NO.		DRAWING NO.
VEP06E11A		SCM007

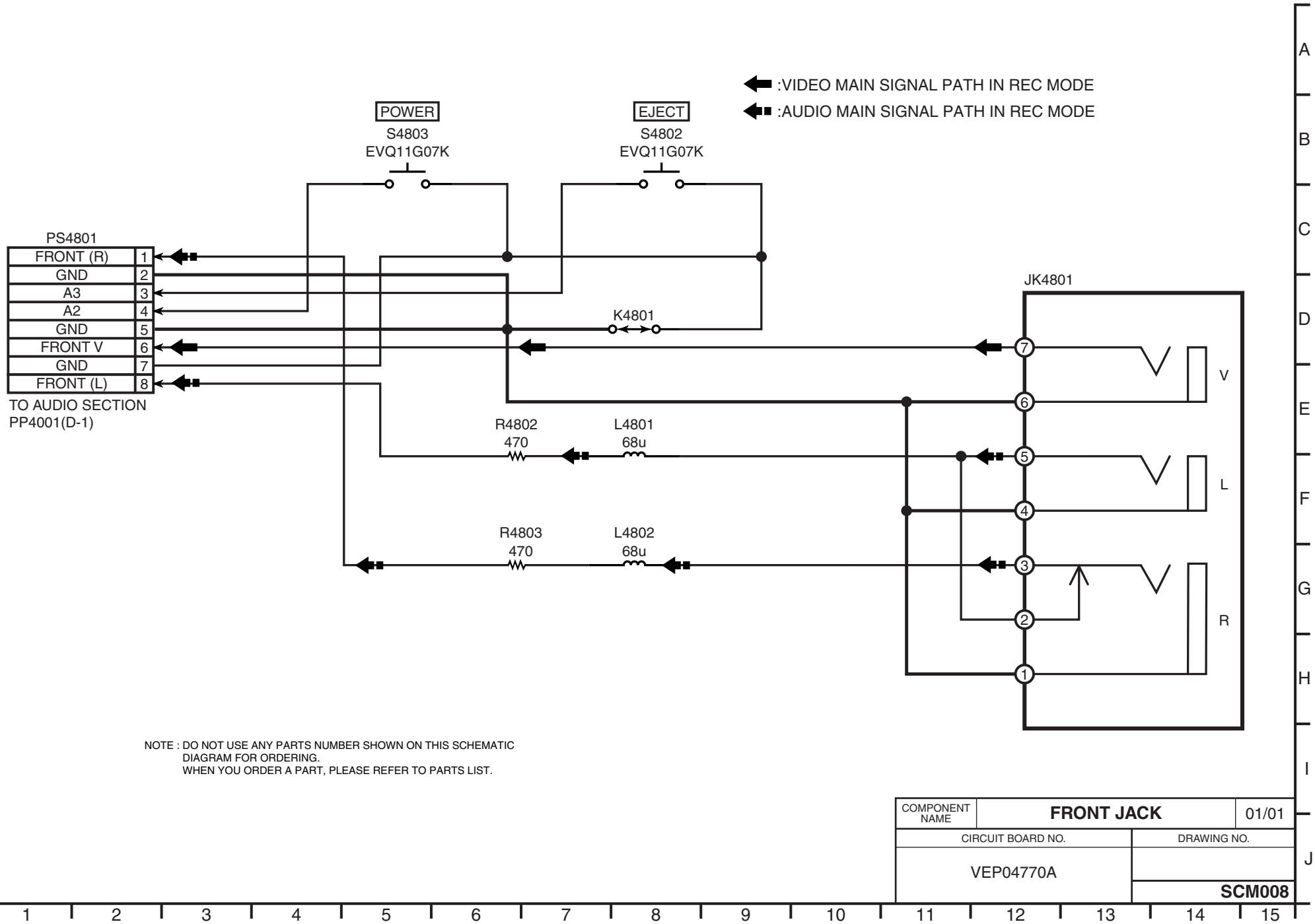

NOTE : DO NOT USE ANY PARTS NUMBER SHOWN ON THIS SCHEMATIC DIAGRAM FOR ORDERING.
WHEN YOU ORDER A PART, PLEASE REFER TO PARTS LIST.

COMPONENT NAME	FRONT JACK	01/01
CIRCUIT BOARD NO.		DRAWING NO.
VEP04770A		SCM008

Ⓢ TO:SYSTEM CONTROL & SERVO / TIMER SECTION

CAUTION

THE ▨ MARK INDICATES THE PRIMARY CIRCUIT TO DISTINGUISH THE PRIMARY FROM THE SECONDARY CIRCUIT. PAY ATTENTION NOT TO RECEIVE AN ELECTRIC SHOCK DURING REPAIR AND SERVICE OF THE PRODUCTS.

HOT

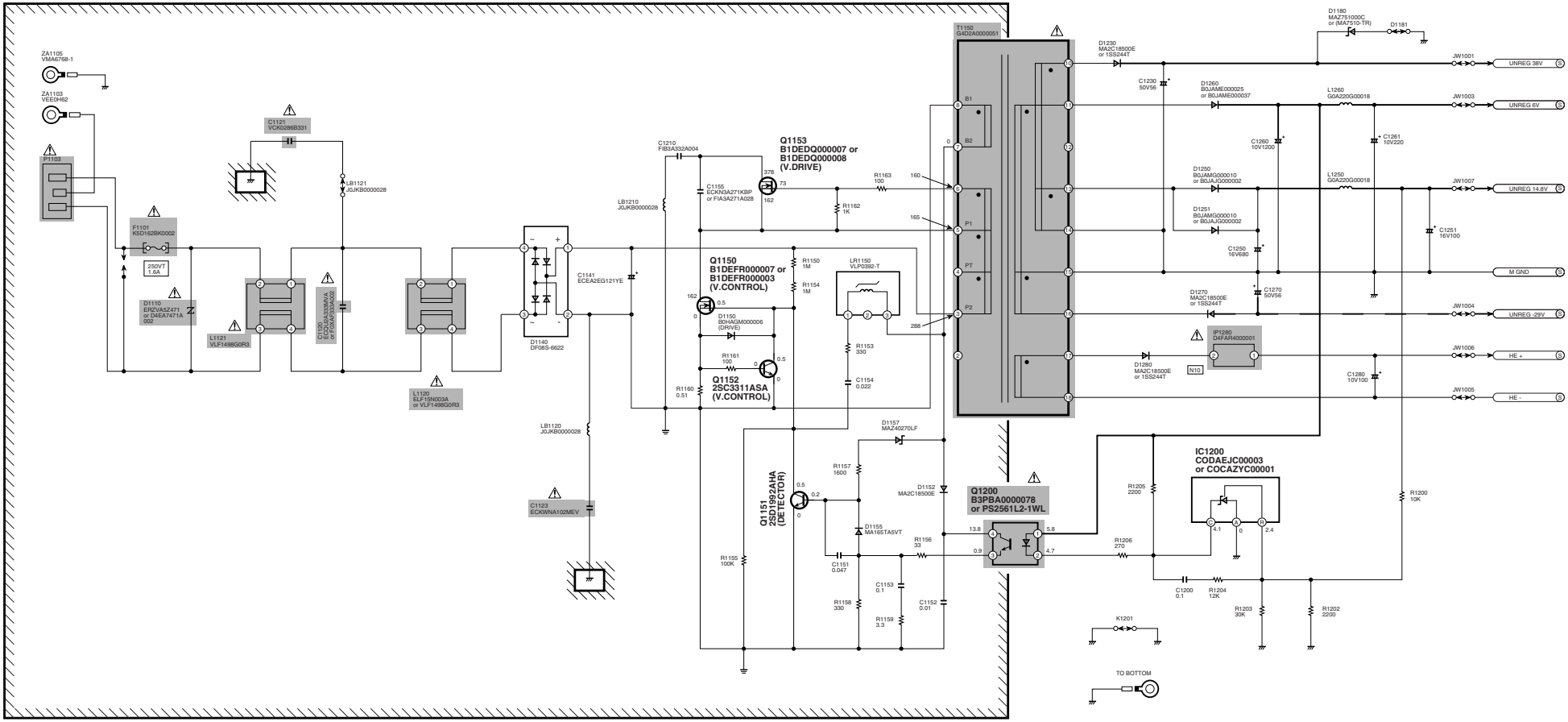

NOTE : THE MEASUREMENT MODE OF THE DC VOLTAGE ON THIS DIAGRAM IS STOP MODE.

IMPORTANT SAFETY NOTICE:
COMPONENTS IDENTIFIED WITH THE MARK ⚠ HAVE THE SPECIAL CHARACTERISTICS FOR SAFETY. WHEN REPLACING ANY OF THESE COMPONENTS USE ONLY THE SAME TYPE.

NOTE : DO NOT USE ANY PARTS NUMBER SHOWN ON THIS SCHEMATIC DIAGRAM FOR ORDERING.
WHEN YOU ORDER A PART, PLEASE REFER TO PARTS LIST.

NOTE1: WHEN MEASURE THE VOLTAGE OR WAVEFORM ON THE POWER TRANSFORMER CIRCUIT,SET THE GND TERMINAL OF MEASURING POINT AS FOLLWS.
PRIMARY SIDE... ⏚ SECONDARY SIDE... ⏚
NOTE2:THE DC VOLTAGE INDICATED IN PRIMARY SIDE IS SHOWN THE VOLTAGE WHEN INPUT AC IS 220V.

COMPONENT NAME	POWER SECTION	01/01
CIRCUIT BOARD NO.		DRAWING NO.
VEP06E21E		SCM001

:VIDEO MAIN SIGNAL PATH IN PLAYBACK MODE
:VIDEO MAIN SIGNAL PATH IN REC MODE
:CAPSTAN SERVO PHASE LOOP
:CAPSTAN SERVO SPEED LOOP
:CYLINDER SERVO SPEED LOOP
:CYLINDER SERVO PHASE LOOP

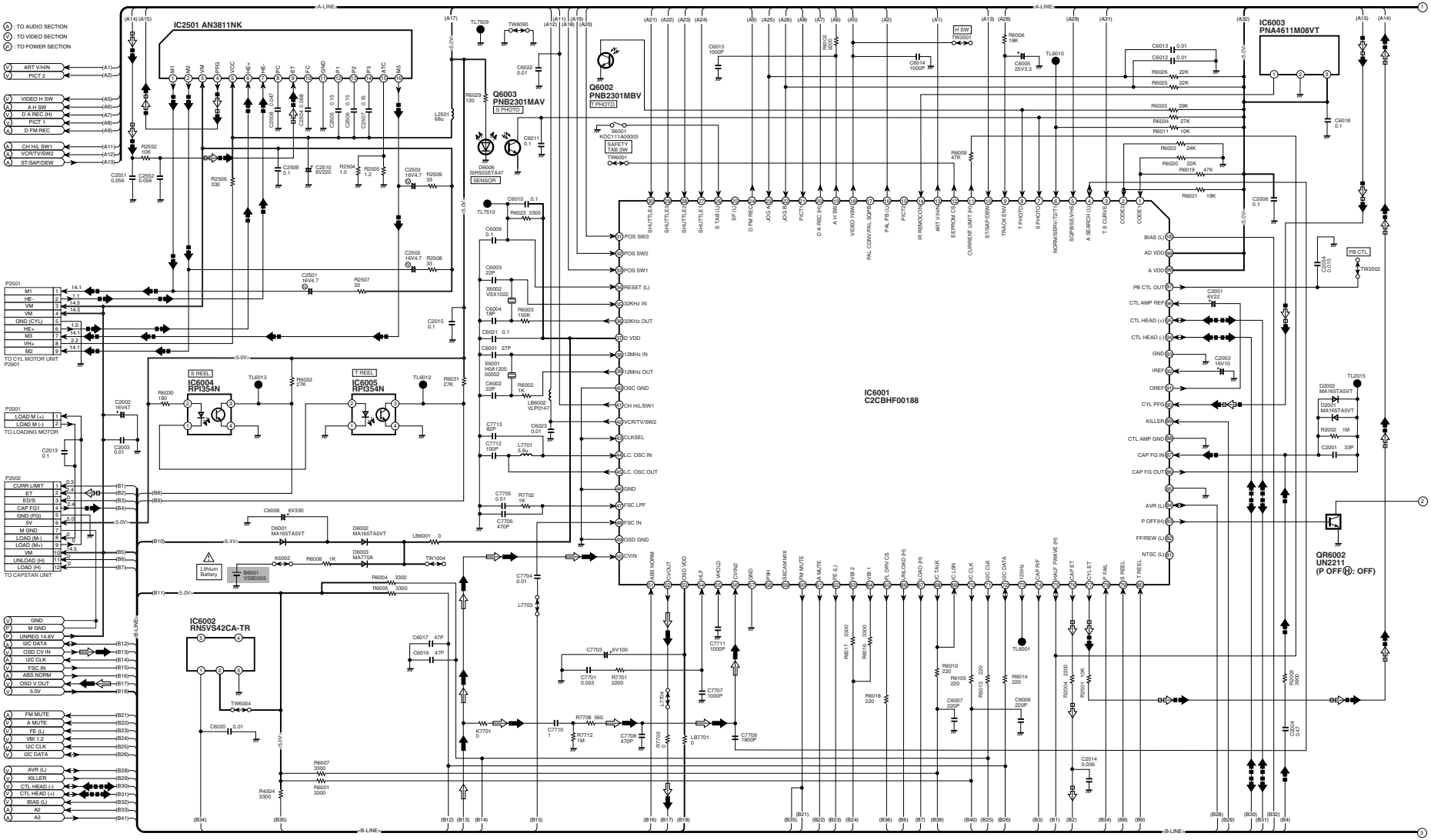

NOTE : DO NOT USE ANY PARTS NUMBER SHOWN ON THIS SCHEMATIC DIAGRAM FOR ORDERING.
WHEN YOU ORDER A PART, PLEASE REFER TO PARTS LIST.

CAUTION
Danger of explosion if battery is incorrectly replaced.
Replace only with the same or equivalent type recommended by the equipment manufacturer.
Discard used batteries according to manufacturer's instructions.

COMPONENT NAME	SYSCON & SERVO/TIMER SECTION	01/02
CIRCUIT BOARD NO.		DRAWING NO.
VEP06E21E		SCM002

:GRID CONTROL SIGNAL PATH
:SEGMENT CONTROL SIGNAL PATH

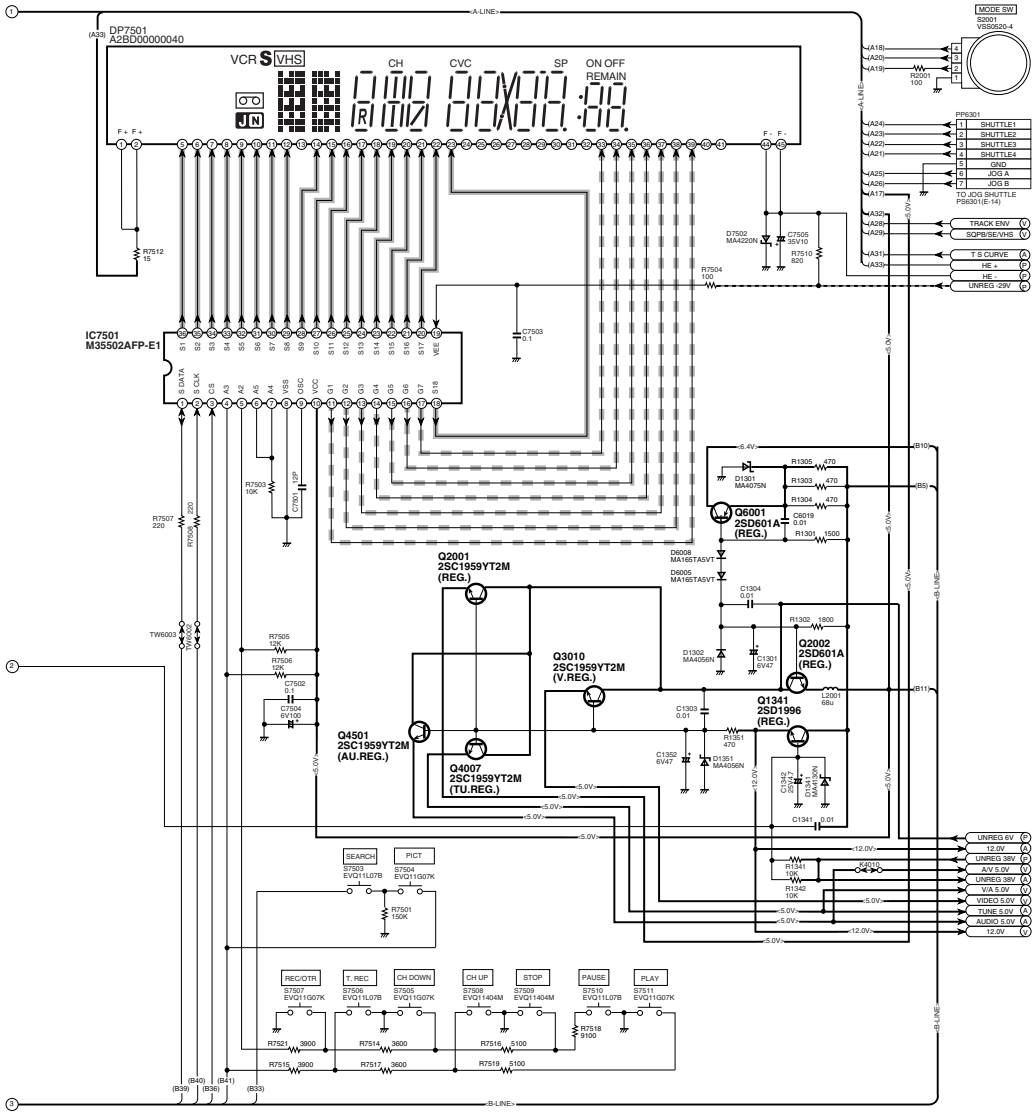

IMPORTANT SAFETY NOTICE:
COMPONENTS IDENTIFIED WITH THE MARK ⚠ HAVE THE SPECIAL CHARACTERISTICS FOR SAFETY.
WHEN REPLACING ANY OF THESE COMPONENTS USE ONLY THE SAME TYPE.

SYSTEM CONTROL & SERVO ICs VOLTAGE CHART (SP MODE)

Ref.No.	IC2501																		
MODE	1	2	3	4	5	6	7	8	9	10	11	12	13	14	15	16			
STOP	14.4	14.4	14.7	1.1	5.0	1.0	1.0	0.5	2.3	1.3	0	3.8	3.8	3.9	0	14.4			
PLAY	14.3	14.3	14.6	1.1	5.0	1.0	1.0	0.4	2.3	1.3	0	3.8	3.8	3.8	0	14.3			
REC	14.3	14.3	14.6	0.8	5.0	1.0	1.0	0.4	2.3	1.3	0	3.8	3.8	3.8	0	14.3			
F.F	14.1	14.1	14.5	0.8	5.0	1.0	1.1	0.4	2.4	1.3	0	3.8	3.8	36.8	0	14.2			
REW	14.1	14.1	14.5	1.1	5.0	1.0	1.1	0.5	2.3	1.3	0	3.8	3.8	3.8	0	14.0			
Ref.No.	IC6001																		
MODE	1	2	3	4	5	6	7	8	9	10	11	12	13	14	15	16	17	18	19	20
STOP	0.8	0	2.4	0	0	4.9	4.8	4.7	1.0	0	0	4.9	0	4.9	4.8	0	4.8	-	0	0
PLAY	0.8	0	2.3	0.3	0	4.9	4.7	4.7	1.6	0	4.6	4.9	0	4.9	4.8	0	4.8	-	-	0
REC	0.8	0	2.3	0.3	0	4.9	4.8	4.6	0	0	4.6	4.8	0	4.9	4.8	0	4.8	-	0	4.7
F.F	0.8	0	2.3	0.3	0	4.9	4.7	4.5	0.8	0	4.8	4.9	0	4.9	4.7	0	4.8	-	0	0
REW	0.8	0	2.3	0.4	0	4.9	4.6	4.5	3.5	0	4.8	4.9	0	4.9	4.8	0	4.8	-	0	0
Ref.No.	IC6001																		
MODE	21	22	23	24	25	26	27	28	29	30	31	32	33	34	35	36	37	38	39	40
STOP	0	0	0	4.8	0	0	0	0	0	0	4.8	0	0	0	1.5	1.5	4.8	-	-	0
PLAY	0	0	0	0	0	0	0	0	0	0	4.8	0	0	4.8	1.5	1.5	4.8	-	-	0
REC	0	0	0	4.7	4.8	0	0	0	0	0	4.8	0	0	4.8	1.5	1.5	4.8	-	-	0
F.F	0	0	0	0	0	0	0	0	0	0	4.8	4.8	0	4.8	1.5	1.5	4.8	-	-	0
REW	0	0	0	0	4.8	0	0	0	0	0	4.8	4.9	0	4.9	1.6	1.6	4.9	-	-	0
Ref.No.	IC6001																		
MODE	41	42	43	44	45	46	47	48	49	50	51	52	53	54	55	56	57	58	59	60
STOP	4.8	0	0	4.4	4.4	0	1.3	2.1	0	2.2	4.2	2.2	5.0	2.1	1.5	1.9	0	0	0	0
PLAY	4.8	4.8	0	4.6	4.6	0	1.3	2.0	0	2.2	4.2	2.2	5.0	2.1	1.5	1.9	0	0	0	0
REC	4.8	4.8	0	0	0	0	1.3	2.0	0	2.2	4.2	2.2	5.0	2.1	1.5	1.9	0	0	0	0
F.F	4.9	0	0	2.9	2.9	0	1.3	2.1	0	2.2	4.2	2.2	5.0	2.0	1.5	1.9	0	0	0	0
REW	4.8	0	0	2.9	2.9	0	1.3	2.1	0	2.2	4.2	2.2	5.0	2.0	1.4	1.9	0	0	0	0
Ref.No.	IC6001																		
MODE	61	62	63	64	65	66	67	68	69	70	71	72	73	74	75	76	77	78	79	80
STOP	0	0	0	0	2.5	0	0	3.5	3.5	3.7	3.7	3.5	2.4	0	0	0	2.3	4.9	0.1	5.0
PLAY	0	0	0	0	2.7	0	0	3.4	3.4	3.7	3.7	3.5	2.4	0	0.3	2.4	2.3	4.9	5.0	5.0
REC	0	0	0	0	2.5	0	0	4.1	3.6	3.7	3.6	3.5	2.4	0	0.3	2.4	2.3	4.9	5.0	5.0
F.F	0	0	0	0	3.7	0	0	4.1	3.9	4.0	3.7	3.6	2.5	0	4.5	4.8	2.3	5.0	2.3	2.3
REW	0	0	0	0	3.7	0	0	3.7	3.7	3.8	3.6	2.5	4.8	4.5	4.8	2.3	5.0	2.2	2.7	5.0
Ref.No.	IC6001																		
MODE	81	82	83	84	85	86	87	88	89	90	91	92	93	94	95	96	97	98	99	100
STOP	0	0	0	4.1	0	2.4	2.4	0	0	1.1	2.4	2.4	0	2.4	2.4	2.4	2.4	4.9	4.9	4.8
PLAY	0	0	0	4.1	0	2.4	2.4	0	0	1.1	2.4	2.4	0	2.4	2.4	2.4	2.3	4.9	4.9	4.8
REC	0	0	0	4.1	0	2.4	2.4	0	0	0.8	2.4	2.4	0	2.9	2.1	2.4	2.4	4.9	4.9	0
F.F	0	0	0	4.2	0	2.5	2.5	0	0	1.1	2.5	2.5	0	2.4	2.4	2.4	2.4	5.0	5.0	4.9
REW	0	0	0	4.2	0	2.5	2.5	0	0	0.8	2.5	2.5	0	2.4	2.4	2.4	2.5	5.0	5.0	4.9
Ref.No.	IC6002					IC6003					IC6004					IC6005				
MODE	1	2	3	4	5	1	2	3			1	2	3	4		1	2	3	4	
STOP	4.9	4.9	0	0	0	4.9	0	4.9			1.1	2.2	5.0	0		0	1.1	5.0	0	
PLAY	4.9	4.9	0	0	0	4.9	0	4.9			1.1	2.2	5.0	0		0	1.1	5.0	0	
REC	4.9	4.9	0	0	0	4.9	0	4.9			1.1	2.2	5.0	0		0	1.1	5.0	0	
F.F	5.0	5.0	0	0	0	4.9	0	4.9			1.1	2.2	2.2	0		0	1.1	2.3	0	
REW	5.0	5.0	0	0	0	4.9	0	4.9			1.1	2.2	2.3	0		0	1.1	2.3	0	
Ref.No.	IC7501																			
MODE	1	2	3	4	5	6	7	8	9	10	11	12	13	14	15	16	17	18	19	20
STOP	3.6	3.8	2.5	4.9	4.9	0	0	0	2.3	4.9	-24.7	-25.0	-25.1	-25.0	-24.9	-24.9	-24.9	-18.5	-29.8	-29.6
PLAY																				
REC																				
F.F																				
REW																				
Ref.No.	IC7501																		
MODE	21	22	23	24	25	26	27	28	29	30	31	32	33	34	35	36			
STOP	-18.5	-20.0	-14.0	-14.0	-19.0	-14.5	-14.6	-14.0	-18.6	-15.0	-15.0	-15.5	-24.4	-20.0	-10.5	-15.0			
PLAY																			
REC																			
F.F																			
REW																			

SYSTEM CONTROL & SERVO TRANSISTORs VOLTAGE CHART (SP MODE)

Ref.No.	Q1341			Q2001			Q2002			Q3010			Q4007			Q4501		
MODE	E	C	B	E	C	B	E	C	B	E	C	B	E	C	B	E	C	B
STOP	12.2	14.7	12.9	5.0	5.7	5.7	5.0	5.7	5.7	5.0	5.6	5.7	5.0	5.6	5.7	5.0	5.6	5.7
PLAY	12.3	14.7	12.9	5.0	5.9	5.8	5.0	5.9	5.7	5.0	5.8	5.8	5.0	5.8	5.7	5.0	5.8	5.8
REC	12.3	14.7	12.9	5.0	5.8	5.8	5.0	5.8	5.7	5.0	5.7	5.7	5.0	5.7	5.7	5.0	5.7	5.8
F.F	12.5	14.5	13.2	5.0	6.1	5.7	5.1	6.1	5.8	5.0	6.0	5.7	5.0	6.0	5.7	5.0	6.0	5.7
REW	12.5	14.5	13.2	5.0	6.0	5.7	5.1	6.1	5.8	5.0	6.0	5.7	5.0	6.0	5.7	5.0	5.9	5.7
Ref.No.	Q6001			Q6002			Q6003			QR6002								
MODE	E	C	B	-	-	-	-	-	-	E	C	B						
STOP	6.4	7.7	7.0	0	4.7		0	4.8		0	12.9	0						
PLAY	6.4	7.7	7.0	0	4.7		0	4.8		0	12.9	0						
REC	6.4	7.7	7.0	0	4.7		0	4.8		0	12.9	0						
F.F	6.4	7.6	7.1	0	4.7		0	4.8		0	13.2	0						
REW	6.4	7.6	7.1	0	4.7		0	4.8		0	13.2	0						

COMPONENT NAME	SYSCON & SERVO/TIMER SECTION	02/02
CIRCUIT BOARD NO.		DRAWING NO.
VEP06E21E		SCM003